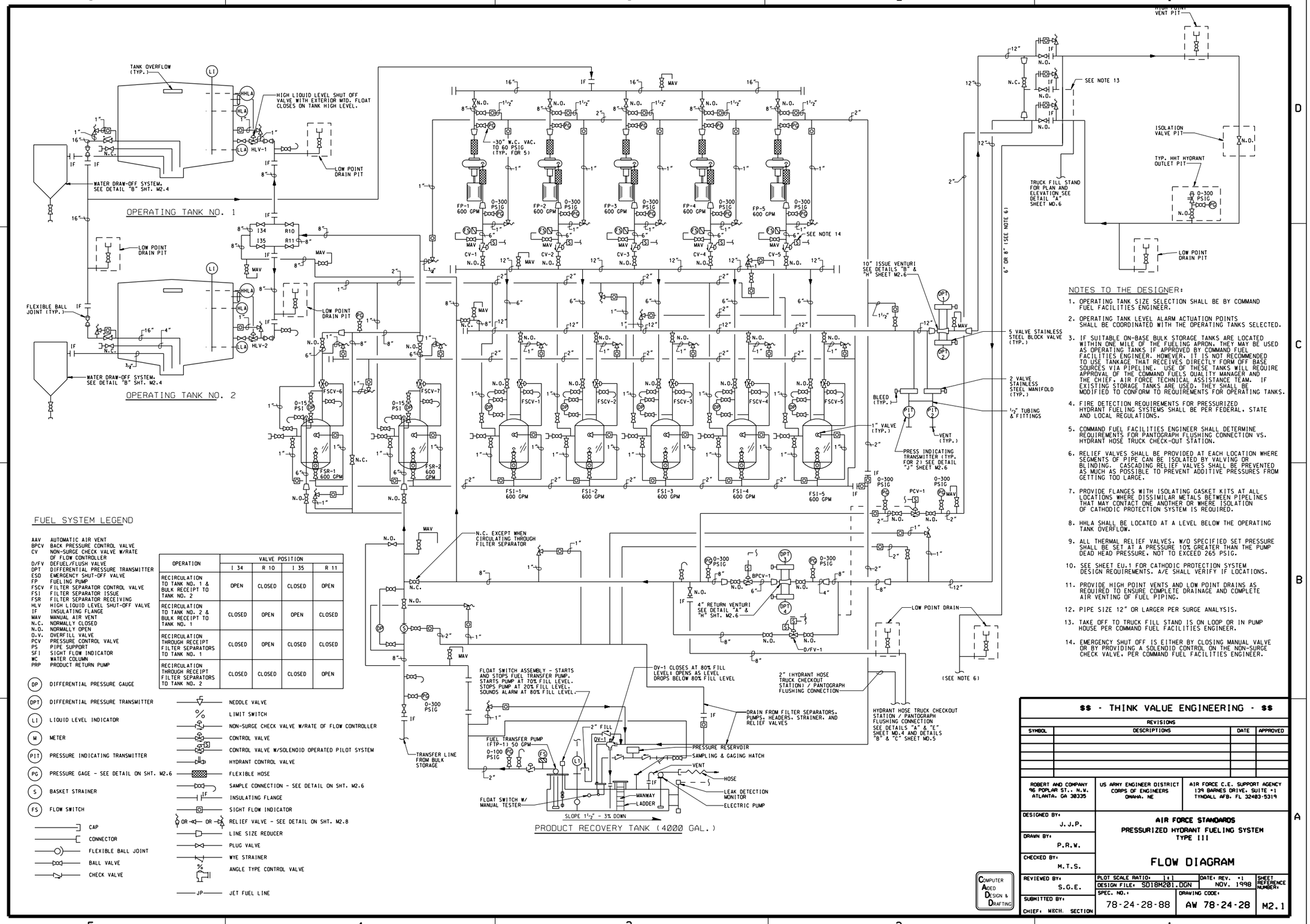

FUEL SYSTEM LEGEND

AAV	AUTOMATIC AIR VENT
BPCV	BACK PRESSURE CONTROL VALVE
CV	NON-SURGE CHECK VALVE W/RATE OF FLOW CONTROLLER
D/FV	DEFUEL/FLUSH VALVE
DPT	DIFFERENTIAL PRESSURE TRANSMITTER
ESD	EMERGENCY SHUT-OFF VALVE
FP	FUELING PUMP
FSCV	FILTER SEPARATOR CONTROL VALVE
FSI	FILTER SEPARATOR ISSUE
FSR	FILTER SEPARATOR RECEIVING
HLV	HIGH LIQUID LEVEL SHUT-OFF VALVE
IF	INSULATING FLANGE
MAV	MANUAL AIR VENT
N.C.	NORMALLY CLOSED
N.O.	NORMALLY OPEN
O.V.	OVERFILL VALVE
PCV	PRESSURE CONTROL VALVE
PS	PIPE SUPPORT
SFI	SIGHT FLOW INDICATOR
WC	WATER COLUMN
PRP	PRODUCT RETURN PUMP

OPERATION	VALVE POSITION			
	I 34	R 10	I 35	R 11
RECIRCULATION TO TANK NO. 1 & BULK RECEIPT TO TANK NO. 2	OPEN	CLOSED	CLOSED	OPEN
RECIRCULATION TO TANK NO. 2 & BULK RECEIPT TO TANK NO. 1	CLOSED	OPEN	OPEN	CLOSED
RECIRCULATION THROUGH RECEIPT FILTER SEPARATORS TO TANK NO. 1	CLOSED	OPEN	CLOSED	CLOSED
RECIRCULATION THROUGH RECEIPT FILTER SEPARATORS TO TANK NO. 2	CLOSED	CLOSED	CLOSED	OPEN

- (DP) DIFFERENTIAL PRESSURE GAUGE
- (DPT) DIFFERENTIAL PRESSURE TRANSMITTER
- (LI) LIQUID LEVEL INDICATOR
- (M) METER
- (PIT) PRESSURE INDICATING TRANSMITTER
- (PG) PRESSURE GAGE - SEE DETAIL ON SHT. M2.6
- (S) BASKET STRAINER
- (FS) FLOW SWITCH
- CAP
- CONNECTOR
- FLEXIBLE BALL JOINT
- BALL VALVE
- CHECK VALVE
- NEEDLE VALVE
- LIMIT SWITCH
- NON-SURGE CHECK VALVE W/RATE OF FLOW CONTROLLER
- CONTROL VALVE
- CONTROL VALVE W/SOLENOID OPERATED PILOT SYSTEM
- HYDRANT CONTROL VALVE
- FLEXIBLE HOSE
- SAMPLE CONNECTION - SEE DETAIL ON SHT. M2.6
- IF INSULATING FLANGE
- SIGHT FLOW INDICATOR
- OR OR RELIEF VALVE - SEE DETAIL ON SHT. M2.8
- LINE SIZE REDUCER
- PLUG VALVE
- WYE STRAINER
- ANGLE TYPE CONTROL VALVE
- JP JET FUEL LINE

NOTES TO THE DESIGNER:

1. OPERATING TANK SIZE SELECTION SHALL BE BY COMMAND FUEL FACILITIES ENGINEER.
2. OPERATING TANK LEVEL ALARM ACTUATION POINTS SHALL BE COORDINATED WITH THE OPERATING TANKS SELECTED.
3. IF SUITABLE ON-BASE BULK STORAGE TANKS ARE LOCATED WITHIN ONE MILE OF THE FUELING APRON, THEY MAY BE USED AS OPERATING TANKS IF APPROVED BY COMMAND FUEL FACILITIES ENGINEER. HOWEVER, IT IS NOT RECOMMENDED TO USE TANKAGE THAT RECEIVES DIRECTLY FORM OFF BASE SOURCES VIA PIPELINE. USE OF THESE TANKS WILL REQUIRE APPROVAL OF THE COMMAND FUELS QUALITY MANAGER AND THE CHIEF, AIR FORCE TECHNICAL ASSISTANCE TEAM. IF EXISTING STORAGE TANKS ARE USED, THEY SHALL BE MODIFIED TO CONFORM TO REQUIREMENTS FOR OPERATING TANKS.
4. FIRE DETECTION REQUIREMENTS FOR PRESSURIZED HYDRANT FUELING SYSTEMS SHALL BE PER FEDERAL, STATE AND LOCAL REGULATIONS.
5. COMMAND FUEL FACILITIES ENGINEER SHALL DETERMINE REQUIREMENTS FOR PANTOGRAPH FLUSHING CONNECTION VS. HYDRANT HOSE TRUCK CHECK-OUT STATION.
6. RELIEF VALVES SHALL BE PROVIDED AT EACH LOCATION WHERE SEGMENTS OF PIPE CAN BE ISOLATED BY VALVING OR BLINDING. CASCADING RELIEF VALVES SHALL BE PREVENTED AS MUCH AS POSSIBLE TO PREVENT ADDITIVE PRESSURES FROM GETTING TOO LARGE.
7. PROVIDE FLANGES WITH ISOLATING GASKET KITS AT ALL LOCATIONS WHERE DISSIMILAR METALS BETWEEN PIPELINES THAT MAY CONTACT ONE ANOTHER OR WHERE ISOLATION OF CATHODIC PROTECTION SYSTEM IS REQUIRED.
8. HHLA SHALL BE LOCATED AT A LEVEL BELOW THE OPERATING TANK OVERFLOW.
9. ALL THERMAL RELIEF VALVES, W/O SPECIFIED SET PRESSURE SHALL BE SET AT A PRESSURE 10% GREATER THAN THE PUMP DEAD HEAD PRESSURE, NOT TO EXCEED 265 PSIG.
10. SEE SHEET EU.1 FOR CATHODIC PROTECTION SYSTEM DESIGN REQUIREMENTS. A/E SHALL VERIFY IF LOCATIONS.
11. PROVIDE HIGH POINT VENTS AND LOW POINT DRAINS AS REQUIRED TO ENSURE COMPLETE DRAINAGE AND COMPLETE AIR VENTING OF FUEL PIPING.
12. PIPE SIZE 12" OR LARGER PER SURGE ANALYSIS.
13. TAKE OFF TO TRUCK FILL STAND IS ON LOOP OR IN PUMP HOUSE PER COMMAND FUEL FACILITIES ENGINEER.
14. EMERGENCY SHUT OFF IS EITHER BY CLOSING MANUAL VALVE OR BY PROVIDING A SOLENOID CONTROL ON THE NON-SURGE CHECK VALVE, PER COMMAND FUEL FACILITIES ENGINEER.

COMPUTER AIDED DESIGN & DRAFTING

$$ - THINK VALUE ENGINEERING - $$

REVISIONS

SYMBOL	DESCRIPTIONS	DATE	APPROVED

ROBERT AND COMPANY
96 POPLAR ST., N.W.
ATLANTA, GA 30335

US ARMY ENGINEER DISTRICT
CORPS OF ENGINEERS
OMAHA, NE

AIR FORCE C.E. SUPPORT AGENCY
139 BARNES DRIVE, SUITE #1
TYNDALL AFB, FL 32403-5319

DESIGNED BY: J.J.P.
DRAWN BY: P.R.W.
CHECKED BY: M.T.S.
REVIEWED BY: S.G.E.
SUBMITTED BY: CHIEF, MECH. SECTION

AIR FORCE STANDARDS
PRESSURIZED HYDRANT FUELING SYSTEM
TYPE III

FLOW DIAGRAM

PLOT SCALE RATIO: 1:1
DESIGN FILE: SD18M201.DGN
DATE: REV. #1 NOV. 1998
SPEC. NO.: 78-24-28-88
DRAWING CODE: AW 78-24-28
SHEET REFERENCE NUMBER: M2.1