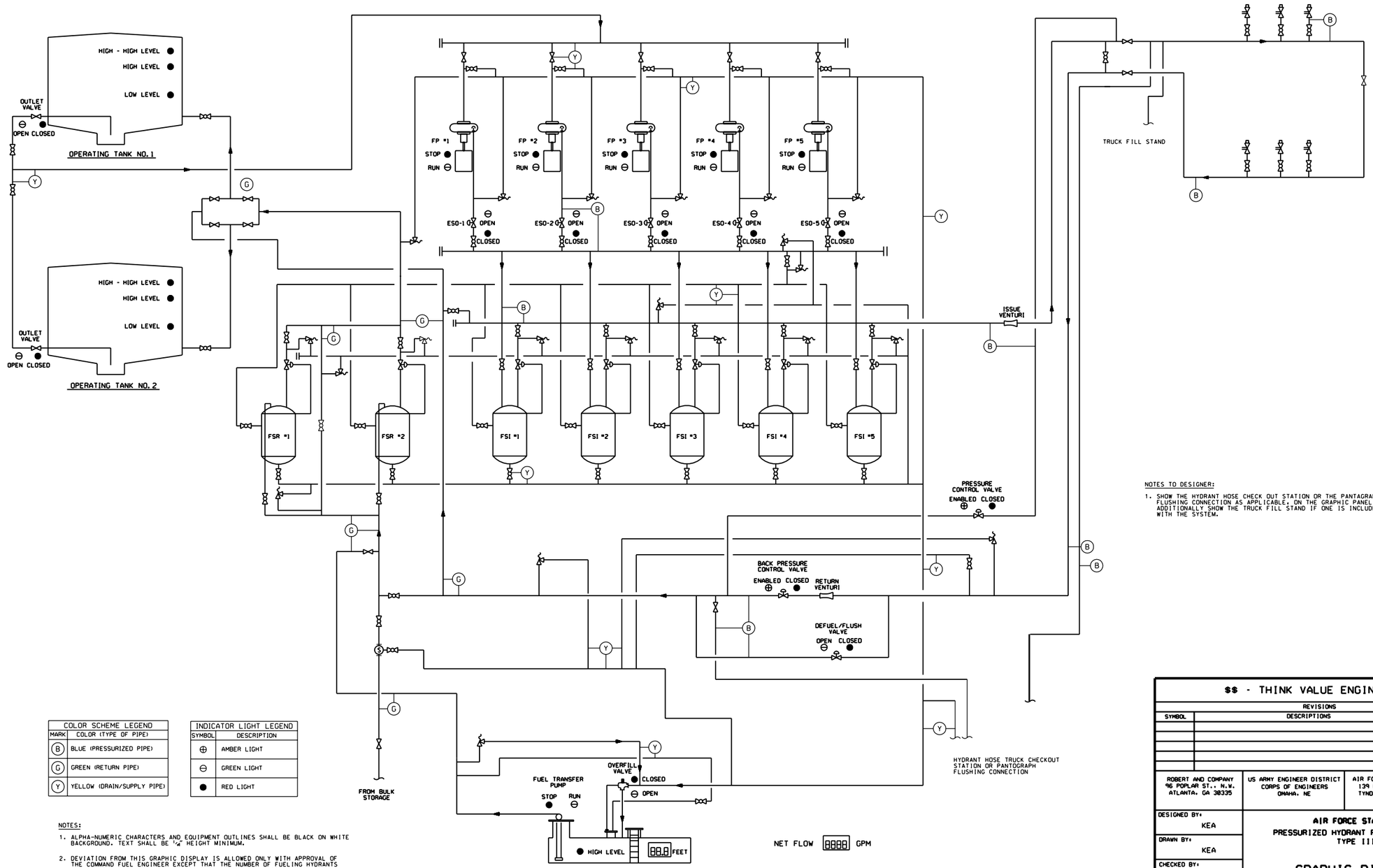

NOTES TO DESIGNER:

1. SHOW THE HYDRANT HOSE CHECK OUT STATION OR THE PANTAGRAPH FLUSHING CONNECTION AS APPLICABLE, ON THE GRAPHIC PANEL. ADDITIONALLY SHOW THE TRUCK FILL STAND IF ONE IS INCLUDED WITH THE SYSTEM.

COLOR SCHEME LEGEND	
MARK	COLOR (TYPE OF PIPE)
B	BLUE (PRESSURIZED PIPE)
G	GREEN (RETURN PIPE)
Y	YELLOW (DRAIN/SUPPLY PIPE)

INDICATOR LIGHT LEGEND	
SYMBOL	DESCRIPTION
⊕	AMBER LIGHT
⊖	GREEN LIGHT
●	RED LIGHT

NOTES:

1. ALPHA-NUMERIC CHARACTERS AND EQUIPMENT OUTLINES SHALL BE BLACK ON WHITE BACKGROUND. TEXT SHALL BE 1/4" HEIGHT MINIMUM.

2. DEVIATION FROM THIS GRAPHIC DISPLAY IS ALLOWED ONLY WITH APPROVAL OF THE COMMAND FUEL ENGINEER EXCEPT THAT THE NUMBER OF FUELING HYDRANTS SHALL MATCH THE ACTUAL NUMBER ON THE APRON AND A HYDRANT HOSE TRUCK CHECKOUT STATION OR PANTAGRAPH FLUSHING CONNECTION AS APPLICABLE, SHALL BE INDICATED.

$$ - THINK VALUE ENGINEERING - $$

REVISIONS			
SYMBOL	DESCRIPTIONS	DATE	APPROVED

ROBERT AND COMPANY
96 POPLAR ST., N.W.
ATLANTA, GA 30335

US ARMY ENGINEER DISTRICT
CORPS OF ENGINEERS
OMAHA, NE

AIR FORCE C.E. SUPPORT AGENCY
139 BARNES DRIVE, SUITE #1
TYNDALL AFB, FL 32403-5319

DESIGNED BY: KEA
DRAWN BY: KEA
CHECKED BY: KKT
REVIEWED BY: RJB
SUBMITTED BY:
CHIEF, ELEC SECTION

AIR FORCE STANDARDS
PRESSURIZED HYDRANT FUELING SYSTEM
TYPE III

GRAPHIC DISPLAY

PLOT SCALE RATIO: 4:1
DESIGN FILE: SD18E802.DGN
DATE REV. #1: NOV. 1998
SPEC. NO.: 78-24-28-88
DRAWING CODE: AW 78-24-28
SHEET REFERENCE NUMBER: E8.2

COMPUTER AIDED DESIGN & DRAFTING

SD18E802.DGN 11/18/2002 09:50:22 AM