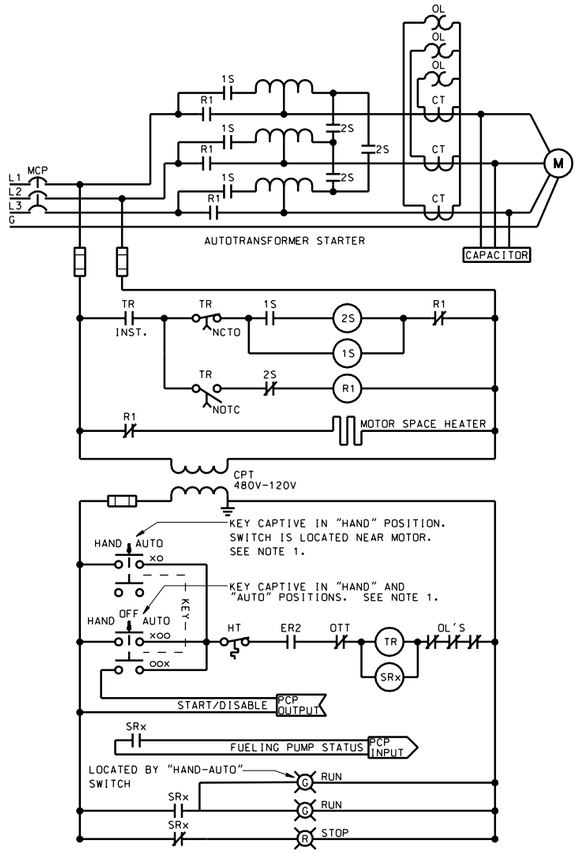

TYPICAL FUELING PUMP (FP-X)

x = 1 FOR FP-1
x = 2 FOR FP-2
x = 3 FOR FP-3
x = 4 FOR FP-4
x = 5 FOR FP-5

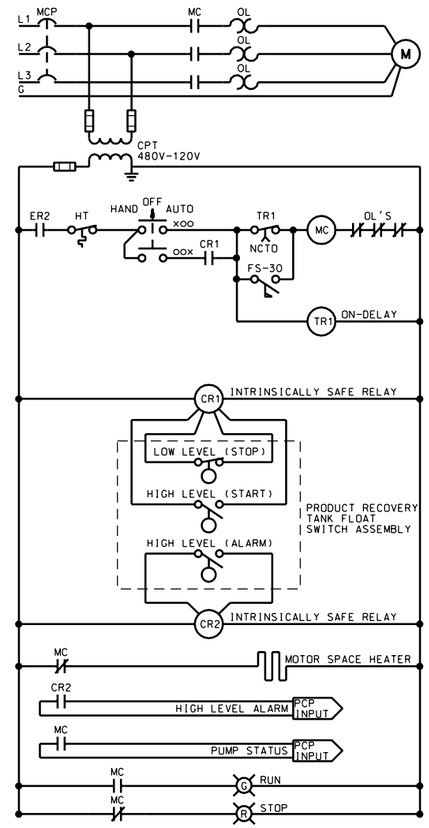

FUELING TRANSFER PUMP (FTP-1)

LOCATED AT PRODUCT RECOVERY TANK

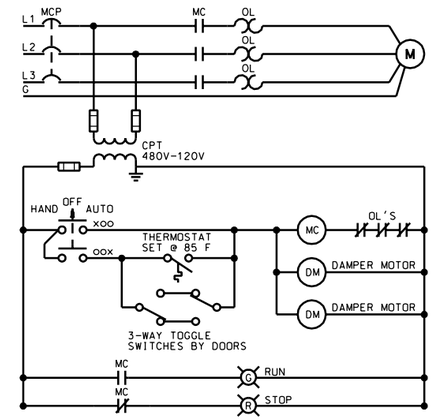

PUMP ROOM EXHAUST FAN

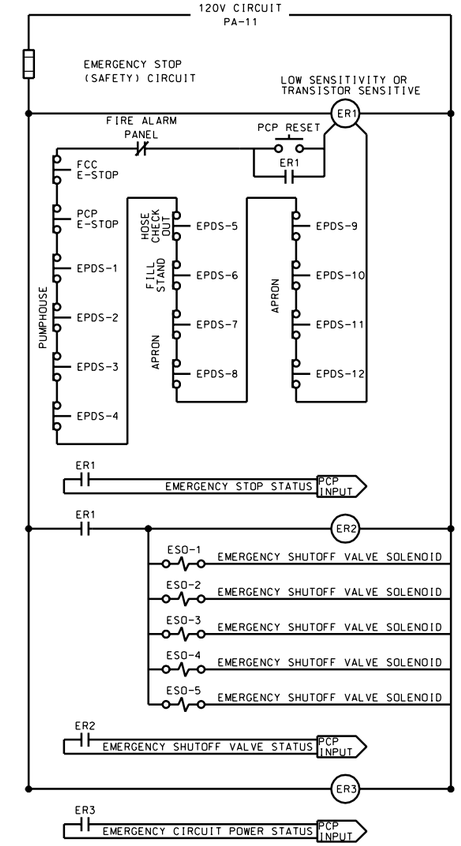

EMERGENCY/SAFTEY CIRCUIT DIAGRAM

COMPONENTS ARE LOCATED IN MOTOR CONTROL CENTER UNLESS INDICATED OTHERWISE

NOTES:

1. KEYED LOCKS FOR LOCAL HAND-AUTO SWITCHES AND CORRESPONDING MCC HOA SWITCHES SHALL BE KEYED ALIKE. KEYED LOCKS FOR HAND-AUTO SWITCHES AND NON-CORRESPONDING MCC HOA SWITCHES SHALL NOT BE KEYED ALIKE.

SUPPLEMENTAL LEGEND:

CR	CONTROL RELAY
DM	DAMPER MOTOR
ER	EMERGENCY/SAFTEY SYSTEM RELAY
HT	MOTOR HIGH TEMPERATURE
MC	MOTOR CONTROLLER
OTT	OVER TEMPERATURE THERMOSTAT ON AUTOTRANSFORMER
SR	STATUS RELAY
TR	TIMER RELAY
EPDS	EMERGENCY POWER DOWN STATION
PCP	PUMP CONTROL PANEL
FCC	FUELS CONTROL CENTER
ESO	EMERGENCY SHUTOFF VALVE

$$ - THINK VALUE ENGINEERING - $$

REVISIONS

SYMBOL	DESCRIPTIONS	DATE	APPROVED

ROBERT AND COMPANY
96 POPLAR ST., N.W.
ATLANTA, GA 30335

US ARMY ENGINEER DISTRICT
CORPS OF ENGINEERS
OMAHA, NE

AIR FORCE C.E. SUPPORT AGENCY
139 BARNES DRIVE, SUITE #1
TYNDALL AFB, FL 32403-5319

DESIGNED BY: KEA
DRAWN BY: KEA
CHECKED BY: KKT
REVIEWED BY: RJB
SUBMITTED BY:
CHIEF, ELEC SECTION

AIR FORCE STANDARDS
PRESSURIZED HYDRANT FUELING SYSTEM
TYPE III

WIRING DIAGRAMS

PLOT SCALE RATIO: 1:12
DESIGN FILE: SD18E502.DGN
DATE: REV. #1 NOV. 1998
SPEC. NO.: 78-24-28-88
DRAWING CODE: AW 78-24-28
SHEET REFERENCE NUMBER: E5.2

COMPUTER AIDED DESIGN & DRAFTING