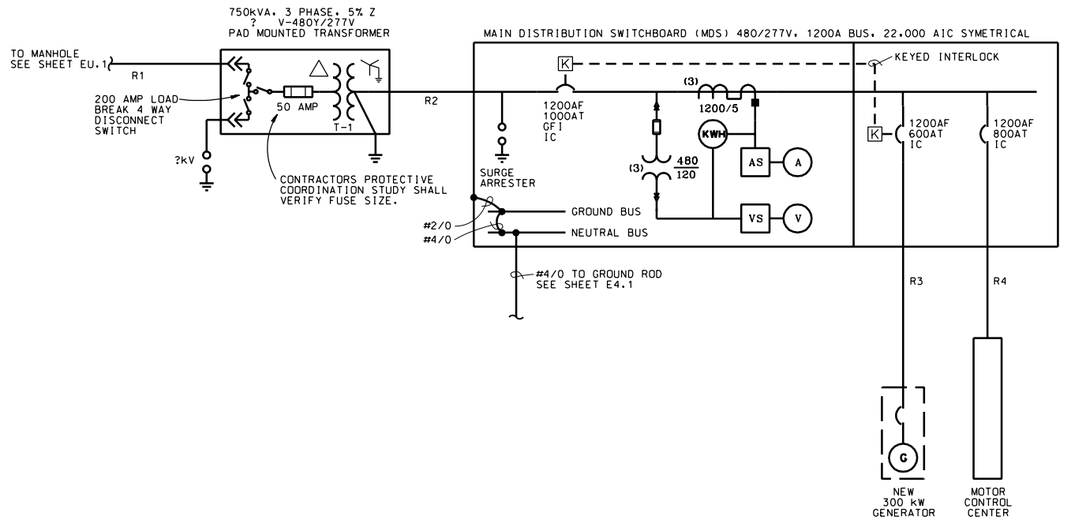

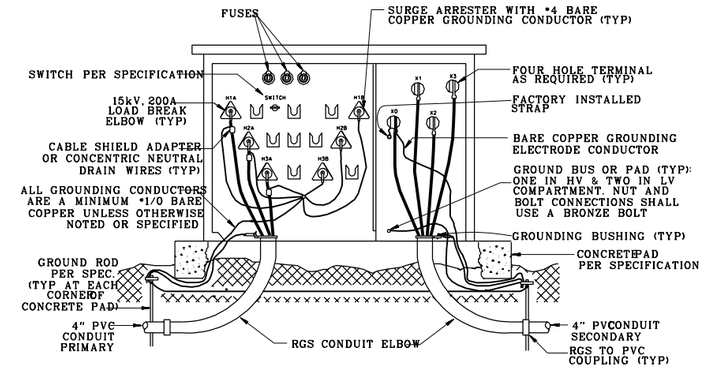

PAD MOUNTED TRANSFORMER GROUNDING DETAIL

NO SCALE

LOOP FEED, DEAD FRONT, DELTA - GROUNDED WYE TRANSFORMER

NOTES:

1. ZONE SELECTIVE GROUND FAULT RELAYING SHALL BE APPLIED TO THE GFI ON EACH FUEL PUMP CIRCUIT BREAKER AND THE GFI ON THE MAIN CIRCUIT BREAKER OF THE MDS.
2. SET THE AUTOTRANSFORMER STARTER TAPS AT THE 80% TAP.

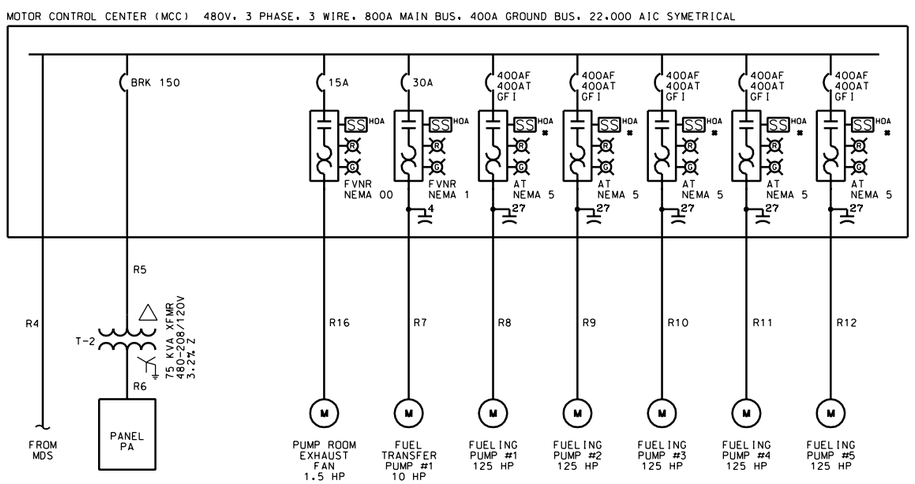

* KEYED HOA SWITCHES SHALL BE KEYED ALIKE WITH THE CORRESPONDING KEYED HAND-AUTO SWITCHES LOCATED NEAR THE MOTORS. SEE SHEET E5.2.

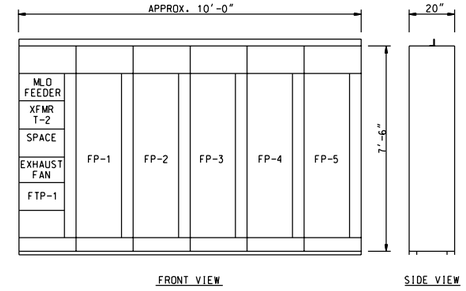

MOTOR CONTROL CENTER (MCC) ELEVATION

NO SCALE

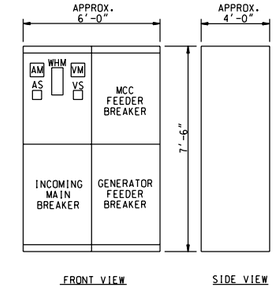

MAIN DISTRIBUTION SWITCHBOARD (MDS)

NO SCALE

NOTES:

1. SEE CONDUIT AND CABLE SCHEDULES ON SHEET E6.1.

NOTES TO DESIGNER:

1. ~~TRANSFORMERS,~~ SWITCHGEAR, MOTOR CONTROL CENTER, FUSES, CIRCUIT BREAKERS, AND CONDUCTORS SHALL HAVE RATINGS APPROPRIATE FOR THE ACTUAL LOADS AND FOR THE CHARACTERISTICS OF THE PRIMARY SERVICE. SWITCHGEAR, MOTOR CONTROL CENTER, AND BREAKERS SHALL HAVE SHORT CIRCUIT RATINGS BASED ON ACTUAL LOADS, AVAILABLE SHORT CIRCUIT CURRENT, AND EQUIPMENT RATINGS.
2. ENGINE GENERATOR SIZE SHALL BE BASED ON THE ABILITY TO START ONE PUMP WITH NO MORE THAN A 20% VOLTAGE DIP WITH A 50KVA LOAD ON PANEL PA AND ONE OTHER PUMP ALREADY RUNNING. GENERATOR SHALL BE ABLE TO RUN ½ OF THE PUMPS. THE STAND BY PUMP IS NOT COUNTED IN THE PUMP TOTAL.
3. SOLID STATE MOTOR STARTERS MAY BE USED INSTEAD OF AUTOTRANSFORMER TYPE WITH APPROVAL OF THE COMMAND FUELS ENGINEER.

COMPUTER AIDED DESIGN & DRAFTING

$$ - THINK VALUE ENGINEERING - $$

REVISIONS

SYMBOL	DESCRIPTIONS	DATE	APPROVED

ROBERT AND COMPANY
96 POPLAR ST., N.W.
ATLANTA, GA 30335

US ARMY ENGINEER DISTRICT
CORPS OF ENGINEERS
OMAHA, NE

AIR FORCE C.E. SUPPORT AGENCY
139 BARNES DRIVE, SUITE #1
TYNDALL AFB, FL 32403-5319

DESIGNED BY: KEA
DRAWN BY: KEA
CHECKED BY: KKT
REVIEWED BY: RJB
SUBMITTED BY:
CHIEF, ELEC SECTION

AIR FORCE STANDARDS
PRESSURIZED HYDRANT FUELING SYSTEM
TYPE III

ONE-LINE DIAGRAM

PLOT SCALE RATIO: 1:12
DESIGN FILE: SD18E501.DGN
DATE: REV. #1 NOV. 1998
SPEC. NO.: 78-24-28-88
DRAWING CODE: AW 78-24-28
SHEET REFERENCE NUMBER: E5.1