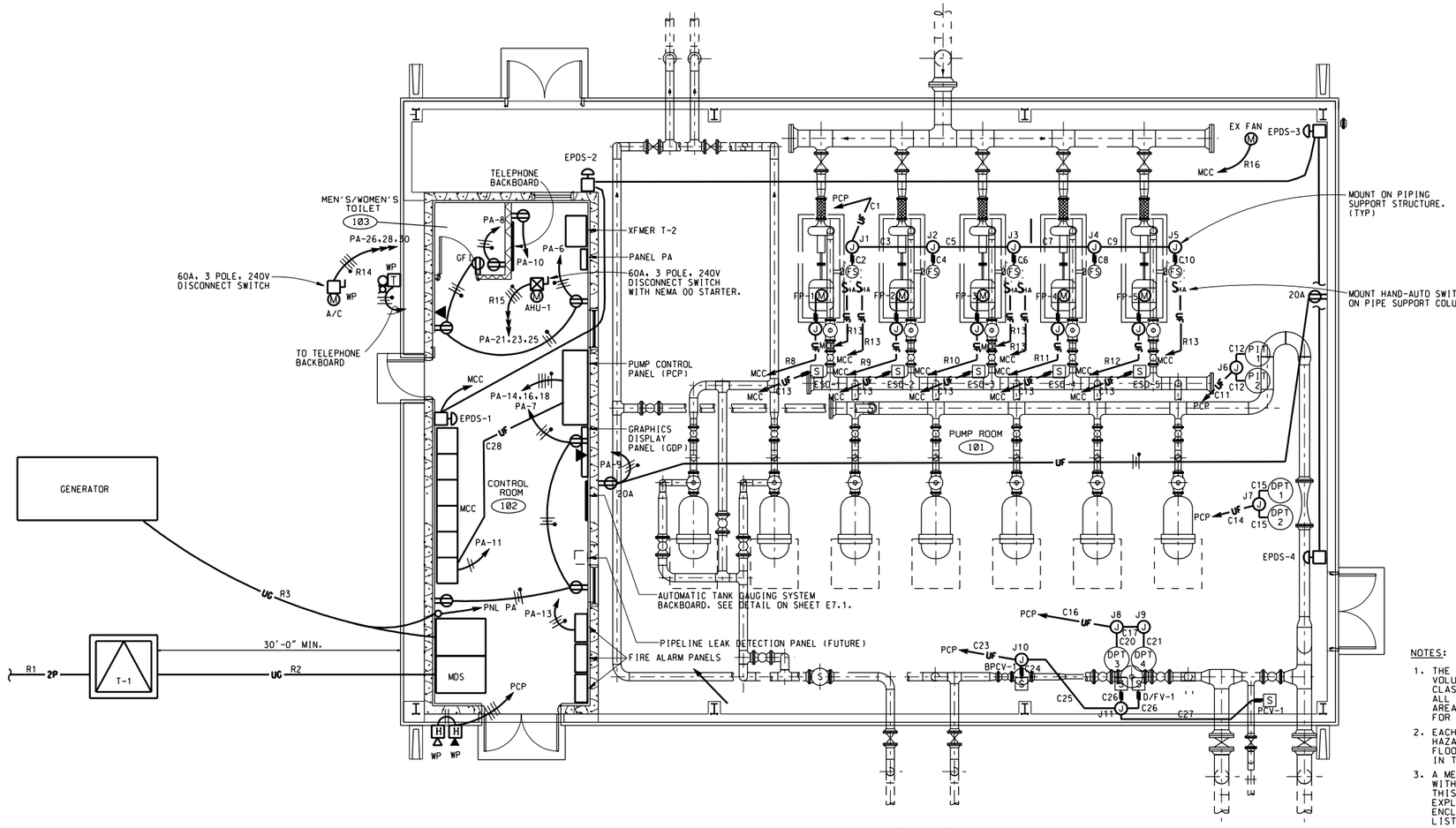

POWER PLAN

SCALE: $\frac{1}{4}$ INCH = 1 FOOT

12" 0 5'

SUPPLEMENTAL LEGEND:

- VIBRATING HORN, 100 dB AT 10 FEET
- RESONATING HORN, 100 dB AT 10 FEET WITH SOUND DISTINCT FROM VIBRATING HORN.
- JUMBO MUSHROOM PUSHBUTTON STATION, 1-NC MOMENTARY CONTACT, MOUNT AT 6' AFF.
- PIT 1 — PRESSURE INDICATING TRANSMITTER
- DPT 1 — DIFFERENTIAL PRESSURE TRANSMITTER
- S — SOLENOID OPERATOR ON VALVE
- FLEXIBLE CONDUIT
- J — JUNCTION BOX OR CONDULET PER N.E.C.
- R1, C1, J1 — POWER, CONTROL, JUNCTION BOX LABELS PER CONDUIT AND CABLE SCHEDULES ON SHEET E6.1
- T — TELEPHONE SYSTEM BELL/STROBE LIGHT
- S_{HA} — KEYED HAND-AUTO SELECTOR SWITCH AND RUN LIGHT. SEE NOTE 6.
- EPDS — EMERGENCY POWER DOWN STATION

NOTES:

1. THE ENTIRE VOLUME UNDER THE PUMPHOUSE SHELTER EXCEPT THE VOLUME INSIDE THE CONTROL ROOM, SHALL BE CONSIDERED A CLASS 1, DIVISION 1 GROUP D (T2D-419F) HAZARDOUS LOCATION. ALL ELECTRICAL EQUIPMENT INSTALLED WITHIN THE HAZARDOUS AREA SHALL BE SPECIFICALLY APPROVED BY UL OR FACTORY MUTUAL FOR THE ABOVE HAZARDOUS AREA CLASSIFICATION.
2. EACH CONDUIT ORIGINATING IN OR PASSING THROUGH OR UNDER A HAZARDOUS AREA AND PENETRATING CONTROL ROOM WALLS, ROOF, OR FLOOR SHALL HAVE EXPLOSION PROOF SEALING FITTINGS INSTALLED IN THE INTERIOR OF THE CONTROL ROOM PER NEC 501-5.
3. A MEANS SHALL BE PROVIDED FOR THE FUTURE REMOVAL OF EQUIPMENT WITHOUT THE TURNING OR REMOVAL OF CONDUIT IN HAZARDOUS LOCATIONS. THIS MAY BE ACCOMPLISHED BY THE INSTALLATION OF AN APPROPRIATE EXPLOSION PROOF UNION AT OR NEAR THE CONDUIT ENTRANCE TO THE ENCLOSURE. UNION SHALL BE RATED FOR THE HAZARDOUS CLASSIFICATION LISTED ABOVE.
4. CONDUIT AND CABLE SCHEDULE IS LOCATED ON SHEET E6.1.
5. ALL METALLIC CONDUITS THAT ARE NOT ATTACHED TO A GROUNDED PANEL OR ENCLOSURE SHALL BE GROUNDED USING A GROUNDED BUSHING.
6. KEYED HAND-AUTO SWITCH WILL BE KEYED ALIKE WITH THE CORRESPONDING KEYED HOA SWITCH IN THE MCC. SEE SHEET E5.2.

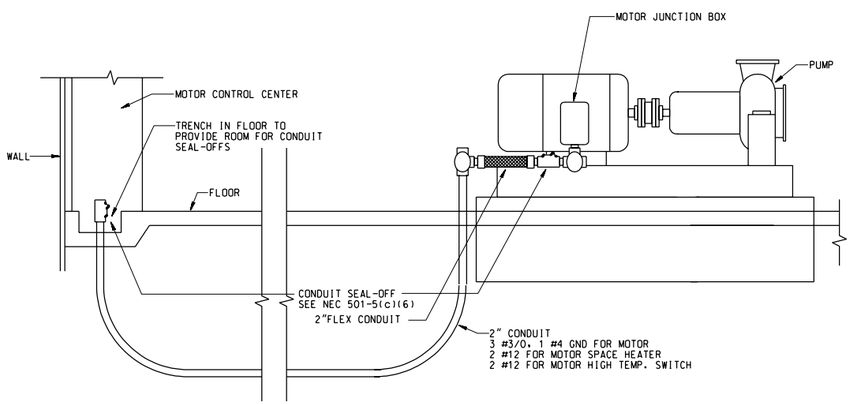

FUELING PUMP CONDUIT CONNECTION DETAIL

NO SCALE

$$ - THINK VALUE ENGINEERING - $$

REVISIONS

SYMBOL	DESCRIPTIONS	DATE	APPROVED

ROBERT AND COMPANY
96 POPLAR ST., N.W.
ATLANTA, GA 30335

US ARMY ENGINEER DISTRICT
CORPS OF ENGINEERS
OMAHA, NE

AIR FORCE C.E. SUPPORT AGENCY
139 BARNES DRIVE, SUITE #1
TYNDALL AFB, FL 32403-5319

DESIGNED BY: KEA
DRAWN BY: KEA
CHECKED BY: KKT
REVIEWED BY: RJB
SUBMITTED BY:
CHIEF, ELEC SECTION

AIR FORCE STANDARDS
PRESSURIZED HYDRANT FUELING SYSTEM
TYPE III

POWER PLAN

PLOT SCALE RATIO: 4:1
DESIGN FILE: SD18E201.DGN
DATE: REV. #1 NOV. 1998
SPEC. NO.: 78-24-28-88
DRAWING CODE: AW 78-24-28
SHEET REFERENCE NUMBER: E2.1

COMPUTER AIDED DESIGN & DRAFTING

SD18E201.DGN 11/18/2002 09:40:58 AM