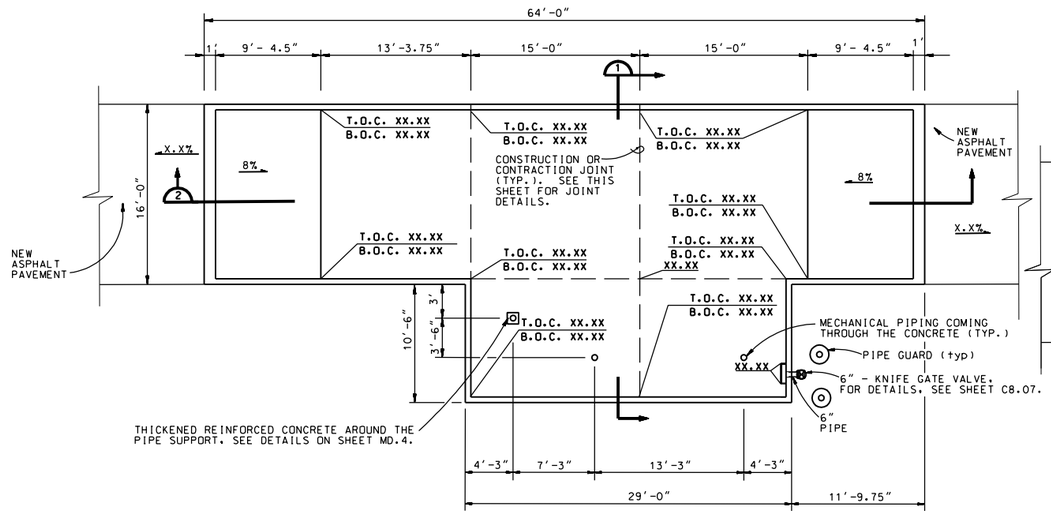

DESIGNER'S NOTE:

THE DIMENSIONS SHOWN FOR THE HYDRANT HOSE CHECKOUT PAD ARE SIZED FOR CONTAINMENT OF A 350 GALLON R-12 REFUELING VEHICLE. SEE MIL HANDBOOK 1022 FOR DESIGN CONTAINMENT REQUIREMENTS.

HYDRANT HOSE TRUCK CHECKOUT PAD - PLAN

SCALE. 1 INCH=5 FEET
5' 0 5'

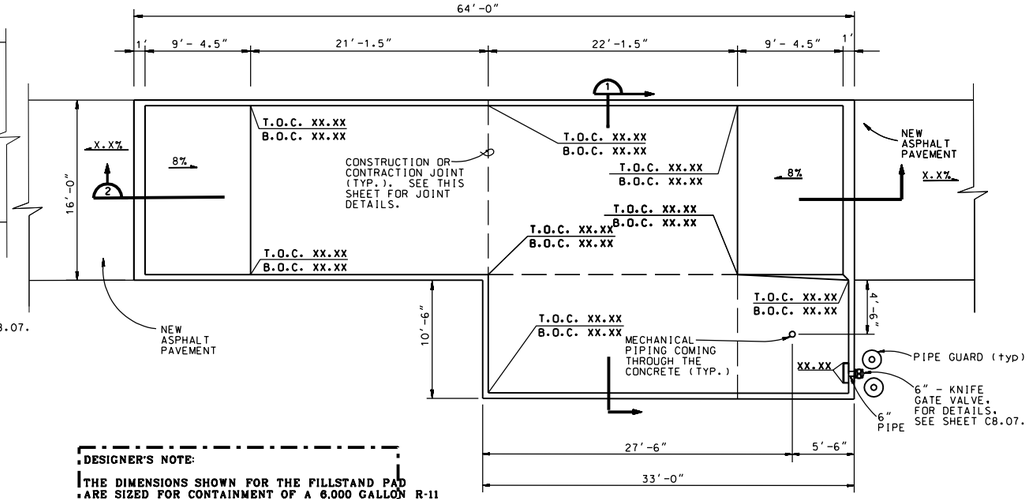

DESIGNER'S NOTE:

THE DIMENSIONS SHOWN FOR THE FILLSTAND PAD ARE SIZED FOR CONTAINMENT OF A 6,000 GALLON R-11 REFUELING VEHICLE. SEE MIL HANDBOOK 1022 FOR DESIGN CONTAINMENT REQUIREMENTS.

FILLSTAND PAD - PLAN

SCALE. 1 INCH=5 FEET
5' 0 5'

NOTES:
1. THE CONCRETE PAVEMENT FOR THE TRUCK FILL STAND SHALL CONFORM TO SPECIFICATIONS SECTION 03300 - CONCRETE FOR BUILDING CONSTRUCTION.
2. T.O.C. XX.XX = TOP OF CURB ELEVATION
   B.O.C. XX.XX = BOTTOM OF CURB ELEVATION

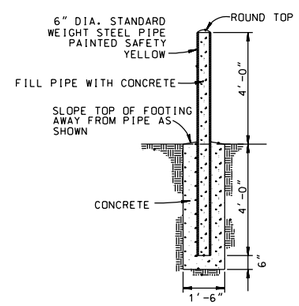

PIPE GUARD DETAIL

NO SCALE

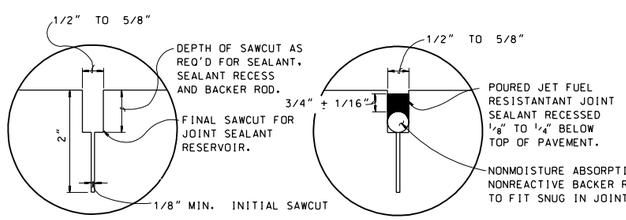

SAWCUT **COMPLETED SAWCUT JOINT**

CONTRACTION JOINT SEALANT DETAILS (SAWED TYPE)

NO SCALE

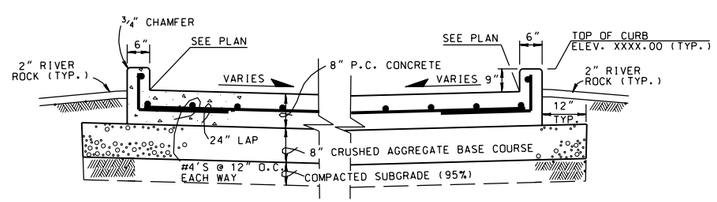

SECTION 1
NO SCALE

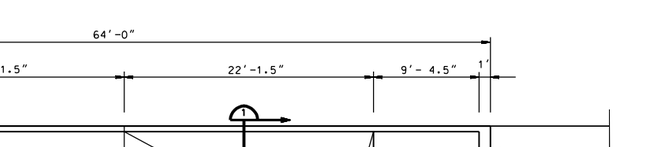

CONSTRUCTION JOINT
NO SCALE

CONTRACTION JOINT
NO SCALE

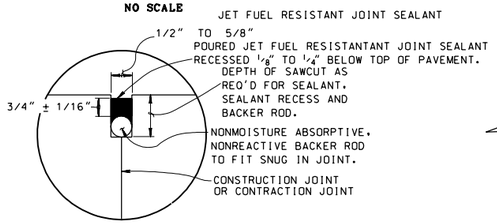

COMPLETED CONSTRUCTION JOINT OR CONTRACTION JOINT SEALANT DETAIL
NO SCALE

POURED JOINT SEALANT DETAILS

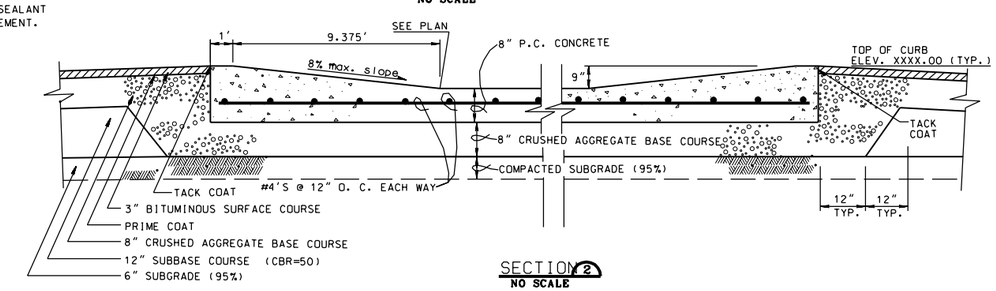

SECTION 2
NO SCALE

COMPUTER AIDED DESIGN & DRAFTING

$$ - THINK VALUE ENGINEERING - $$

REVISIONS

SYMBOL	DESCRIPTIONS	DATE	APPROVED

ROBERT AND COMPANY
96 POPLAR ST., N.W.
ATLANTA, GA 30335

US ARMY ENGINEER DISTRICT
CORPS OF ENGINEERS
OMAHA, NE

AIR FORCE C.E. SUPPORT AGENCY
139 BARNES DRIVE, SUITE #1
TYNDALL AFB, FL 32403-5319

DESIGNED BY: PODRAZA
DRAWN BY: PODRAZA
CHECKED BY: VAN HOVE
REVIEWED BY:
SUBMITTED BY:
CHIEF, CIVIL SECTION

AIR FORCE STANDARDS
PRESSURIZED HYDRANT FUELING SYSTEM
TYPE III

HYDRANT HOSE TRUCK CHECKOUT & FILLSTAND PAD DETAILS

PLOT SCALE RATIO:
DESIGN FILE:
DATE: REV. #1 NOV. 1998
SPEC. NO.: 78-24-28-88
DRAWING CODE: AW 78-24-28
SHEET REFERENCE NUMBER: C8.06

SD18C806.DGN 11/18/2002 09:36:25 AM