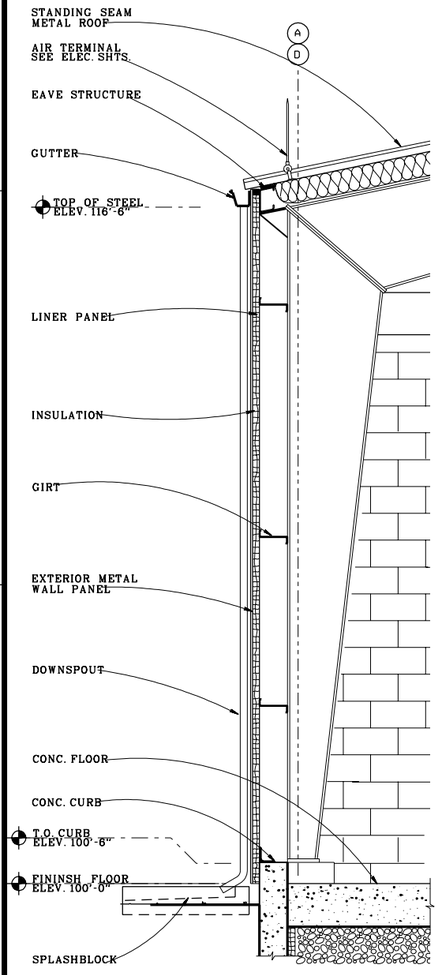

WALL SECTION 1 A1.11A1.2
SCALE: 3/4 INCH = 1 FOOT

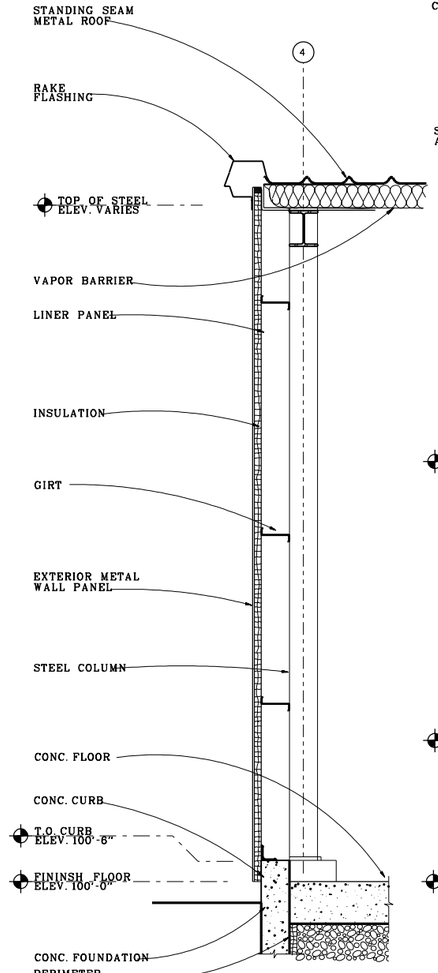

WALL SECTION 2 A1.11A1.2
SCALE: 3/4 INCH = 1 FOOT

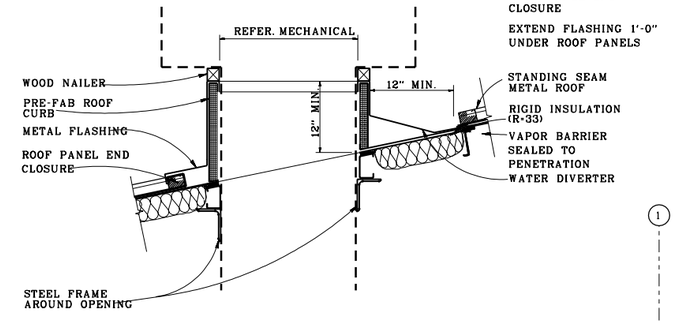

CURB DETAIL A1.11A1.2
SCALE: 1 1/2 INCH = 1 FOOT

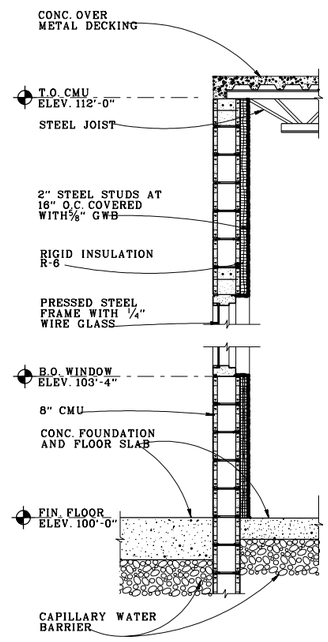

WALL SECTION 3 A1.11A1.2
SCALE: 3/4 INCH = 1 FOOT

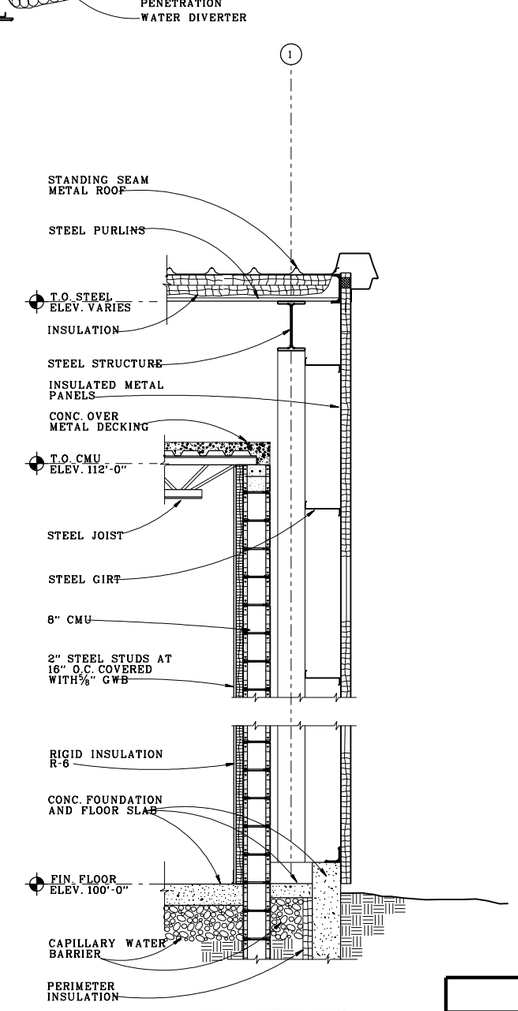

WALL SECTION 4 A1.11A1.2
SCALE: 3/4 INCH = 1 FOOT

$$ - THINK VALUE ENGINEERING - $$

REVISIONS

SYMBOL	DESCRIPTIONS	DATE	APPROVED

ROBERT AND COMPANY
96 POPLAR ST., N.W.
ATLANTA, GA 30335

US ARMY ENGINEER DISTRICT
CORPS OF ENGINEERS
OMAHA, NE

AIR FORCE C.E. SUPPORT AGENCY
139 BARNES DRIVE, SUITE #1
TYNDALL AFB, FL 32403-5319

DESIGNED BY: M.D.M.
DRAWN BY: M.D.M.
CHECKED BY: G.F.B.
REVIEWED BY:
SUBMITTED BY: CHIEF, ARCH./SECTION

AIR FORCE STANDARDS
PRESSURIZED HYDRANT FUELING SYSTEM
TYPE III
PUMPHOUSE
WALL SECTION

PLOT SCALE RATIO: 1.333:1
DESIGN FILE: SD18A501.DGN
DATE: REV. #1 NOV. 1998
SHEET REFERENCE NUMBER:
SPEC. NO.: 78-24-28-88
DRAWING CODE: AW 78-24-28
A1.2

COMPUTER AIDED DESIGN & DRAFTING

SD18A501.DGN 11/18/2002 09:34:42 AM