CORPS OF ENGINEERS | 4 | 3 | 2 | 1 | U.S. ARMY

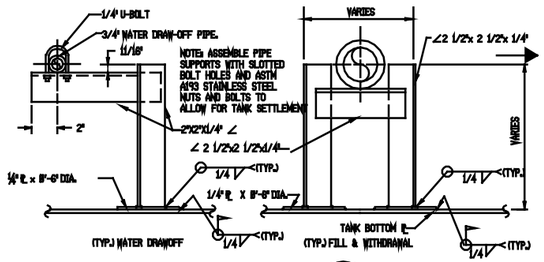

PIPE SUPPORTS 1 (21/24)
N.T.S.

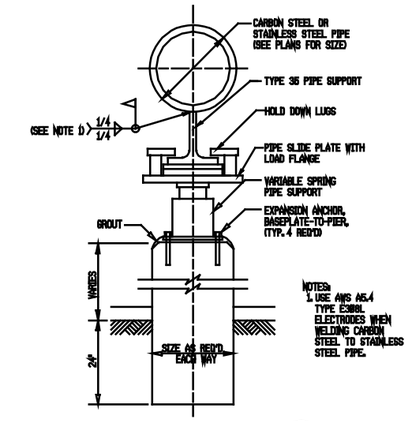

SPRING PIPE SUPPORT 2 (21/24)
N.T.S.

SADT NOTE:
1. SELECT SPRING SUPPORTS TO PROVIDE FOR MAXIMUM TANK SETTLEMENT

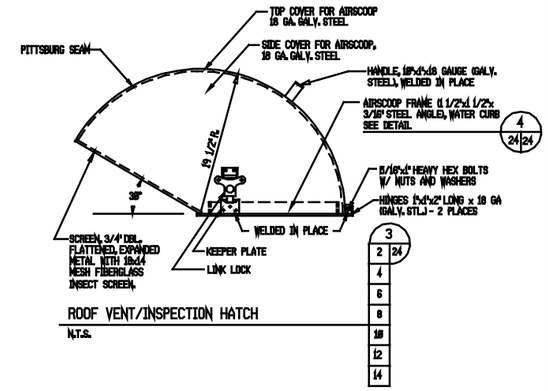

ROOF VENT/INSPECTION HATCH 3 (2 4 6 8 10 12 14 / 24)
N.T.S.

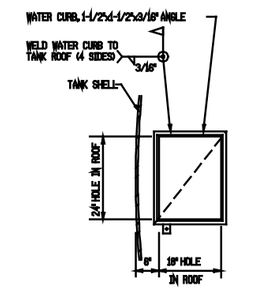

CUTOUT DIAGRAM 4 (24/24)
N.T.S.

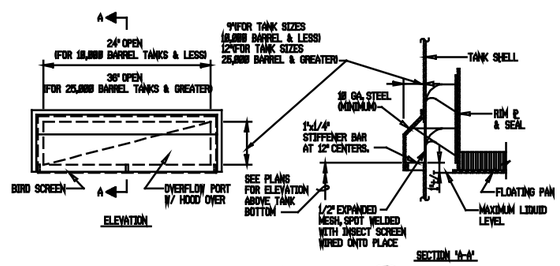

OVERFLOW PORT/VENT 6 (2 4 6 8 10 12 14 / 24)
N.T.S.

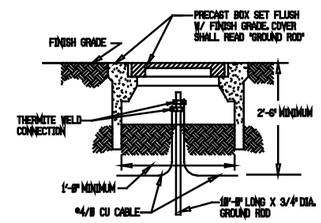

GROUND ROD BOX 7 (21/24)
N.T.S.

NOTE:
GROUND RODS SHALL BE ZINC COATED STEEL. INTERCONNECTING CONDUCTORS SHALL BE #4/0 COPPER WITH UL-83 TYPE TW INSULATION.

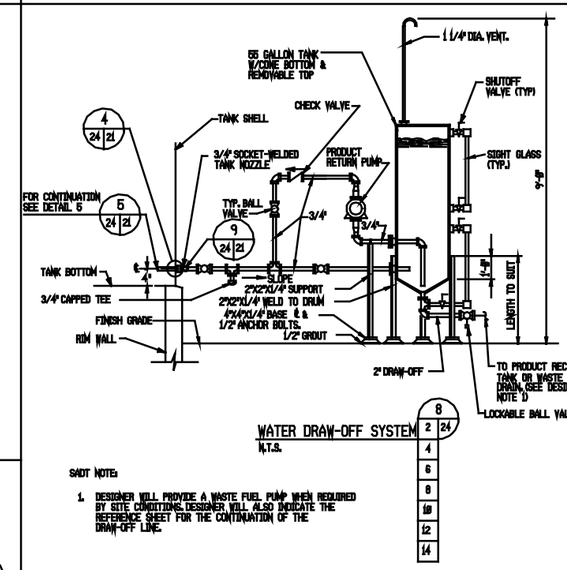

WATER DRAW-OFF SYSTEM 8 (2 4 6 8 10 12 14 / 24)
N.T.S.

SADT NOTE:
1. DESIGNER WILL PROVIDE A WASTE FUEL PUMP WHEN REQUIRED BY SITE CONDITIONS. DESIGNER WILL ALSO INDICATE THE REFERENCE SHEET FOR THE CONTINUATION OF THE DRAW-OFF LINE.

SADT NOTE:
1. PROVIDE A WASTE FUEL PUMP IF REQUIRED WITH THE WATER DRAW-OFF SYSTEM.

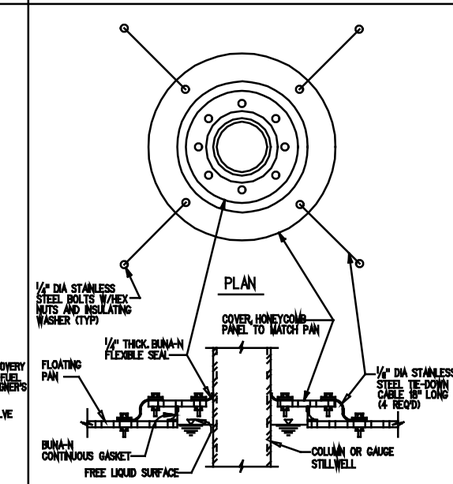

COLUMN COVER DETAIL - ELEVATION 11 (20/24)
N.T.S.

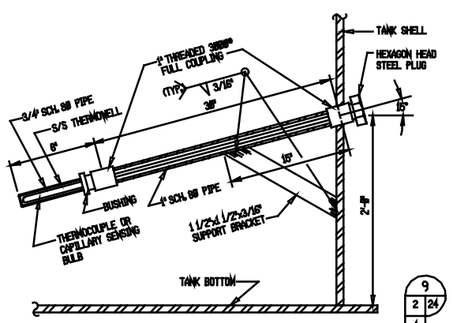

THERMOMETER WELL 9 (2 4 6 8 10 12 14 / 24)
N.T.S.

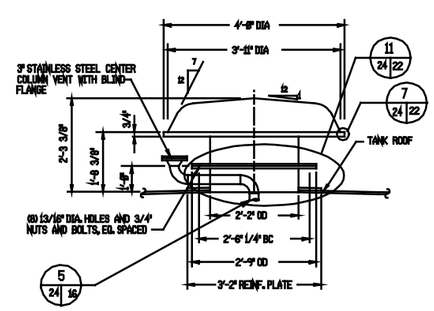

ROOF VENT 10 (10 12 14 / 24)
N.T.S.

Symbol	Description	Date	Approved
	Revisions		

U.S. ARMY ENGINEER DIVISION, HUNTSVILLE
CORPS OF ENGINEERS
HUNTSVILLE, ALABAMA

Site adapt A/E:

US Army Corps of Engineers

STANDARD FUELING SYSTEMS ABOVEGROUND VERTICAL STEEL TANKS WITH FLOATING PANS & FIXED ROOFS

WATER DRAW-OFF & MISCELLANEOUS DETAILS

Dwn. by: CWL | Ckd. by: SLW

Reviewed by:

Approved by:

Date: FEB 93

Drawing code: AW 78-24-27

Sheet reference number: 24

Design file no.:

Rev.

Sheet 24 of 24

5 | 4 | 3 | 2 | 1