CORPS OF ENGINEERS | 4 | 3 | 2 | 1 | U.S. ARMY

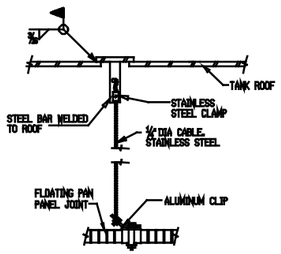


GROUNDING CABLE (1 / 2 23)
N.T.S.

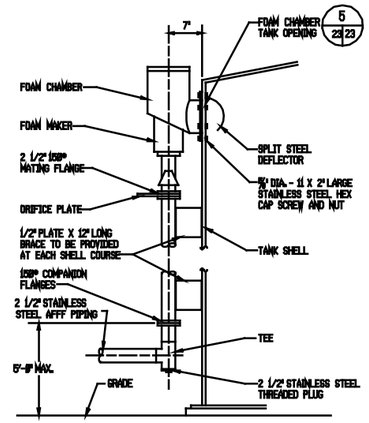


FOAM CHAMBER (3 / 2 23)
N.T.S.

NOTE: HOLE DIAMETER OF ORIFICE PLATE IS DETERMINED BY MFR. BASED ON PRESSURE AND FLOWRATE CONDITIONS.

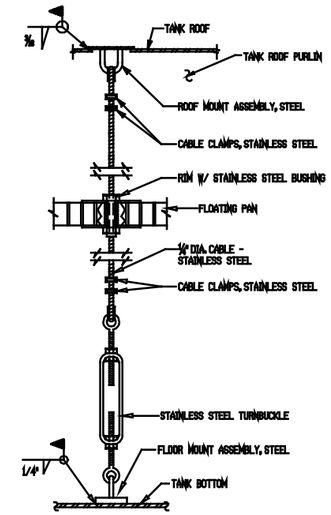


ANTI-ROTATION CABLE (4 / 2 23)
N.T.S.

NOTES:
ALL STAINLESS STEEL IS TYPE 304

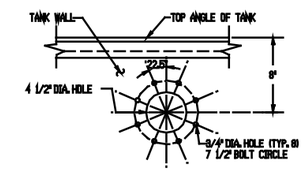


FOAM CHAMBER OPENING (5 / 23 23)
N.T.S.

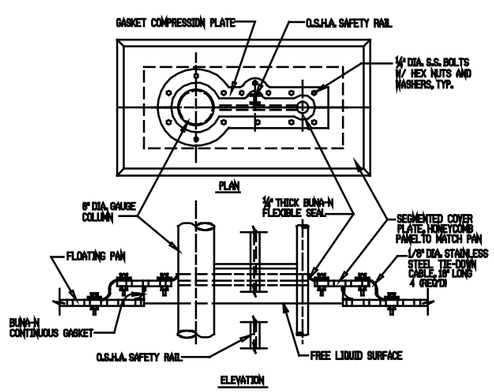


LADDER PENETRATION (6 / 2 23)
N.T.S.

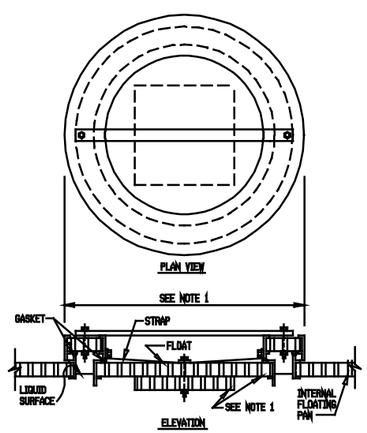


PRESSURE/VACUUM VENT (7 / 2 23)
N.T.S.

NOTES: 1. PRESSURE/VACUUM (PV) VENT SHALL BE SIZED BY THE INTERNAL FLOATING PAN MFR. FOR THE MAXIMUM FILL AND WITHDRAWAL RATES:
FILL: GPM
WITHDRAWAL: GPM
2. PV VENT SHOWN IN THE CLOSED POSITION. IN THE OPEN POSITION, THE FLOAT SHALL HANG FROM THE STRAP.

NOTE TO DESIGNER: PROVIDE MAXIMUM FILL AND WITHDRAWAL RATES.

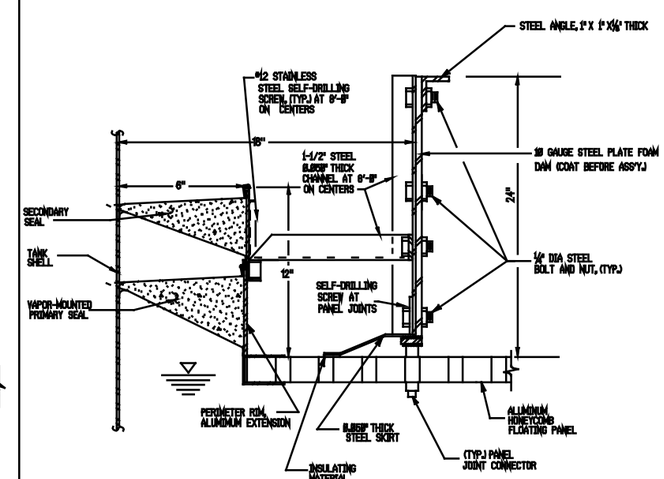


RIM SEAL/FOAM DAM SECTION (A / 10 23)
N.T.S.

NOTES:
1. INTERNAL FLOATING PAN RIM SEAL SHALL COMPLY WITH ALL FEDERAL, STATE, AND LOCAL REQUIREMENTS FOR PREVENTION OF EMISSIONS OF VOLATILE ORGANIC COMPOUNDS (VOC'S)
2. INSTALL INSULATING MATERIAL FOR ELECTRICAL ISOLATION AT ALL STEEL TO ALUMINUM CONNECTIONS.

| Symbol | Description | Date | Approved |
|---|---|---|---|
| | Revisions | | |

U.S. ARMY ENGINEER DIVISION, HUNTSVILLE
CORPS OF ENGINEERS
HUNTSVILLE, ALABAMA

Site adapt A/E:

US Army Corps of Engineers

STANDARD FUELING SYSTEMS ABOVEGROUND VERTICAL STEEL TANKS WITH FLOATING PANS & FIXED ROOFS

# FLOATING PAN AND AFFF SYSTEM DETAILS

Dwn. by: CWL | Ckd. by: SLW
Reviewed by:
Approved by:
Date: FEB 93
Drawing code: AW 78-24-27
Sheet reference number: 23
Design file no.:
Rev.
Sheet 23 of 24

5 | 4 | 3 | 2 | 1