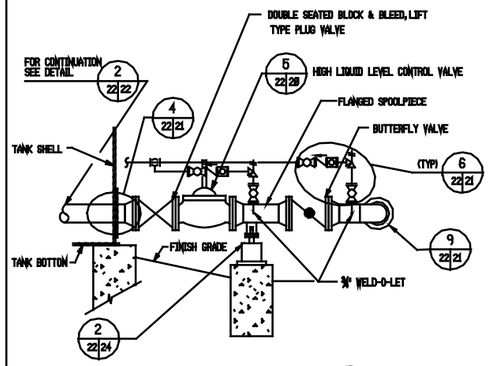

FILL LINES 1 (2 22, 4, 6, 8, 10, 12, 14)
N.T.S.

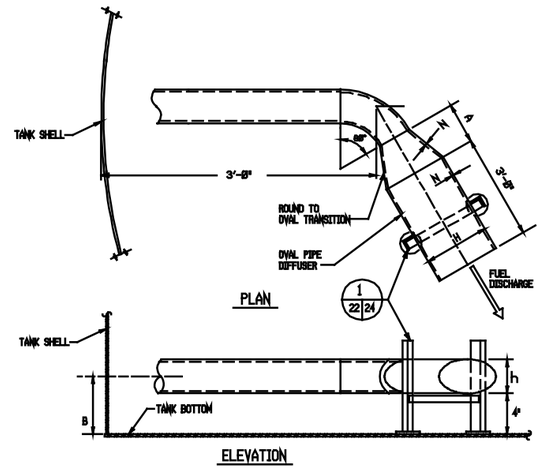

FILL DIFFUSER 2 22 22
N.T.S.

NOTES:

1. ORIENTATION OF FILL DIFFUSER SHALL IMPART A CCW ROTATION TO THE FUEL IN THE NORTHERN HEMISPHERE; CW ROTATION IN THE SOUTHERN HEMISPHERE.
2. THICKNESS OF SHELL & REINFORCING PLATE SHALL BE THE SAME.
3. SEE TABLE 1 ON THIS SHEET FOR DIMENSIONS.

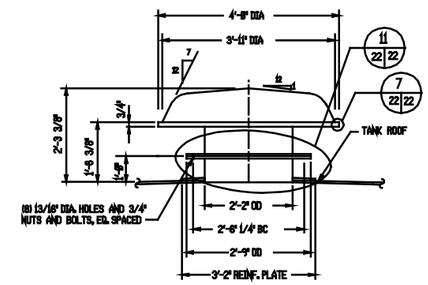

ROOF VENT 3 (2 22, 4, 6, 8)
N.T.S.

TABLE 1
SHELL NOZZLE DIMENSIONS

SIZE OF LINE	O.D. OF PIPE	J	N	Q	D_R	L_R	W_R	hxH	A	B
28"	28"	11"	.500	1 11/16"	28 1/8"	41 1/2"	58 1/2"	28x36"	38"	24"
18"	18"	18"	.500	1 9/16"	18 1/8"	37 1/2"	45 3/4"	18x34"	27"	22"
16"	16"	18"	.500	1 7/16"	16 1/8"	33 1/2"	40 3/4"	16x38"	24"	28"
14"	14"	18"	.500	1 3/8"	14 1/8"	29 1/2"	36"	14x28"	21"	18"
12"	12 3/4"	9"	.500	1 1/4"	12 7/8"	27"	33"	12x22"	18"	17"
10"	10 3/4"	9"	.500	1 3/16"	10 7/8"	23"	28 1/4"	10x18"	15"	15"
8"	8 5/8"	8"	.500	1 1/8"	8 3/4"	19"	23 1/4"	8x14"	12"	13"
6"	6 5/8"	8"	.432	1"	6 3/4"	15 3/4"	19 1/2"	6x10"	9"	11"
4"	4 1/2"	7"	.337	10/16"	4 5/8"	12"	15 1/4"	4x8"	6"	9"
3"	3 1/2"	7"	.300	10/16"	3 5/8"	10 1/2"	13 1/2"	3x6"	4 1/2"	8"
3/4"	3/4"	5"	.300	10/16"	1"	6"	7"			

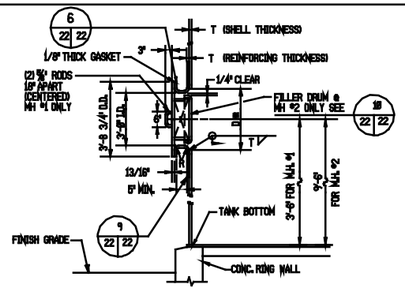

MANHOLE #1 & #2 5 (2 22, 4, 6, 8, 10, 12, 14)
N.T.S.

NOTE:

1. SEE TABLE 2 ON THIS SHEET FOR DIMENSIONS.

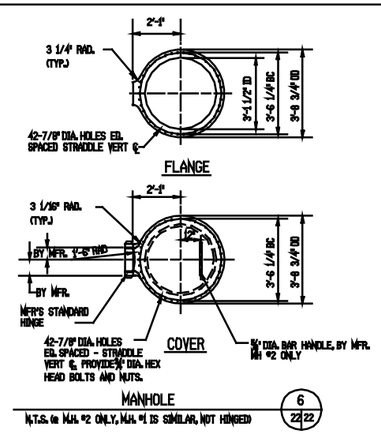

MANHOLE
N.T.S. (w M.H. #2 ONLY, M.H. #1 IS SIMILAR, NOT HINGED) 6 22 22

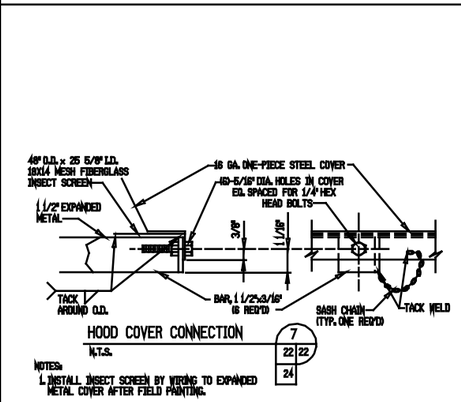

HOOD COVER CONNECTION 7 (22 22, 24)
N.T.S.

NOTES:

1. INSTALL INSECT SCREEN BY WIRING TO EXPANDED METAL COVER AFTER FIELD PAINTING.

TABLE 2
SHELL MANHOLE DIMENSIONS

TANK SIZE (BBL)	T	R	L_{HR}	W_{HR}	D_{HR}
2,500	1/4"	1/4"	76"	93 3/4"	37"
5,000	1/4"	1/4"	76"	93 3/4"	37"
10,000	5/16"	5/16"	77 3/4"	93 1/4"	37 1/4"
25,000	1/2"	1/2"	77 1/4"	92 1/2"	38"
55,000	11/16"	11/16"	76 1/2"	91 1/4"	38 3/4"
80,000	13/16"	3/4"	76 1/4"	90 3/4"	39 1/8"
100,000	7/8"	7/8"	76 1/4"	90 3/4"	39 1/2"

NOTES: 1. R DIMENSIONS ARE APPROXIMATE
2. TANK BOTTOM (FOR SHELL HEIGHT DIMENSIONS) IS THE TOP ELEVATION OF BOTTOM PLATE AT SHELL-TO-BOTTOM JOINT.

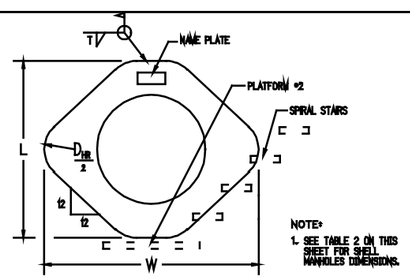

NOTE:

1. SEE TABLE 2 ON THIS SHEET FOR SHELL MANHOLES DIMENSIONS.

SHELL MANHOLE #1 & #2 DETAIL 9 (22 22)
N.T.S.

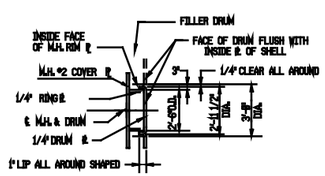

FILLER DRUM 10 (22 22)
N.T.S.

TABLE 3
ROOF NOZZLE DIMENSIONS

SIZE LINE	O.D. OF PIPE	CUTOUT Dp	MIN. HEIGHT Hn	D_R
1-1/2"	1.900"	2"	6"	8"
2"	2-3/8"	2-1/2"	6"	7"
3"	3-1/2"	3-5/8"	6"	9"
4"	4-1/2"	4-5/8"	6"	11"
6"	6-5/8"	6-3/4"	6"	15"
8"	8-5/8"	8-7/8"	6"	19"
10"	10-3/4"	11"	8"	22"
12"	12-3/4"	13"	8"	24"
20"	20-3/8"	21"	12"	36"

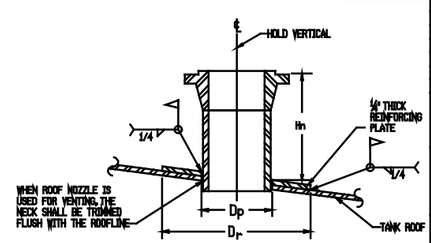

ROOF PENETRATION 11 (22 22, 24)
N.T.S.

Symbol	Description	Date	Approved
	Revisions		

U.S. ARMY ENGINEER DIVISION, HUNTSVILLE
CORPS OF ENGINEERS
HUNTSVILLE, ALABAMA

Site adapt A/E :

US Army Corps of Engineers

STANDARD FUELING SYSTEMS ABOVEGROUND VERTICAL STEEL TANKS WITH FLOATING PANS & FIXED ROOFS

Dwn. by: CWL | Ckd. by: SLW

APPURTENANCES & FITTINGS

Reviewed by :
Approved by :
Date : FEB 93
Drawing code : AW 78-24-27
Sheet reference number : 22
Design file no.:
Rev.
Sheet 22 of 24