CORPS OF ENGINEERS | 4 | 3 | 2 | 1 | U.S. ARMY

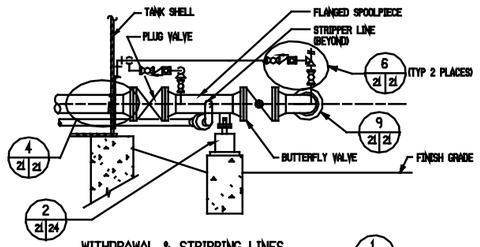

WITHDRAWAL & STRIPPING LINES
N.T.S.

NOTE:
1. PROVIDE 6" STRIPPER LINE FOR TANK SIZES 60,000 BARRELS AND LARGER; PROVIDE 4" STRIPPER LINE FOR TANK SIZES SMALLER THAN 60,000 BARRELS

FOR PIPING PLAN ON READY ISSUE TANKS SEE 2/21/21
FOR PIPING PLAN ON BULK STORAGE TANKS SEE 3/21/21

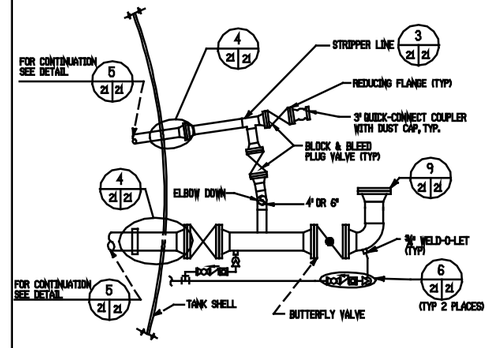

READY ISSUE TANK PIPING PLAN
N.T.S.

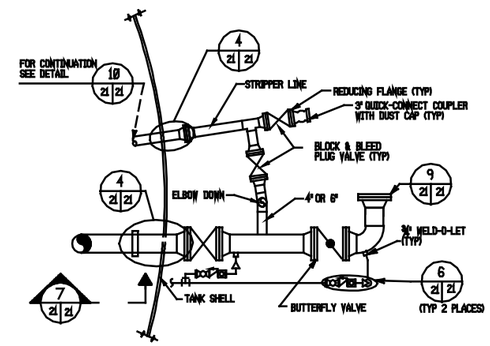

BULK STORAGE TANK PIPING PLAN
N.T.S.

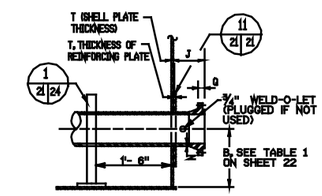

SHELL PENETRATION
N.T.S.

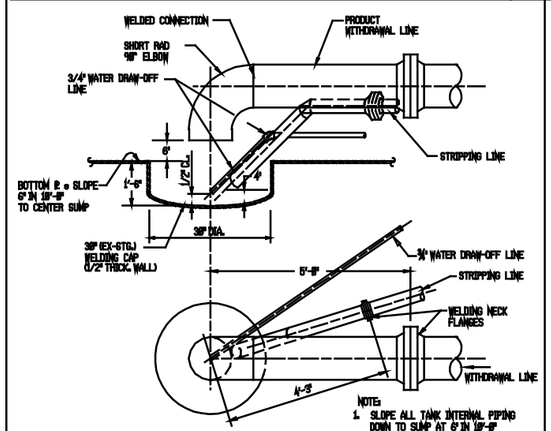

NOTE:
1. SLOPE ALL TANK INTERNAL PIPING DOWN TO SUMP AT 6" IN 10'-0"

SUMP PIPING DETAIL
N.T.S.

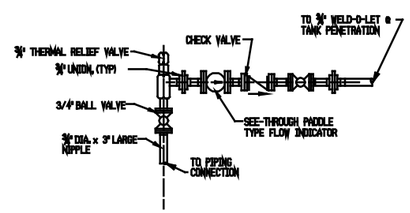

THERMAL RELIEF VALVE PIPING
N.T.S.

NOTE:
1. ALL FITTINGS TO BE SOCKET-WELD TYPE EXCEPT AS INDICATED. ALL VALVES SHALL BE FLANGED, AND ALL PIPE SCHEDULE 80

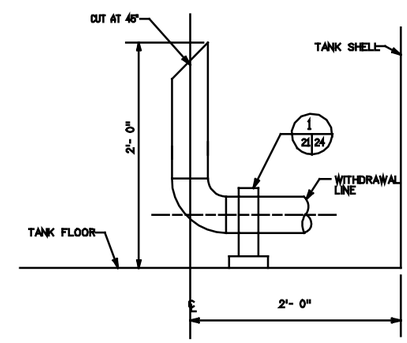

WITHDRAWAL INLET SECTION
N.T.S.

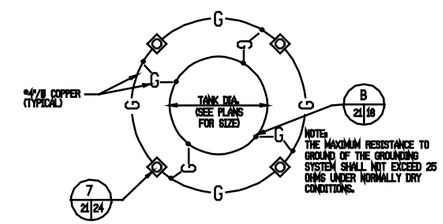

TANK GROUND PLAN
N.T.S.

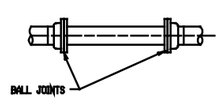

FLEXIBLE BALL JOINTS
N.T.S.

SADT NOTE:
DIMENSION LENGTH BASED ON ESTIMATED TANK SETTLEMENT.

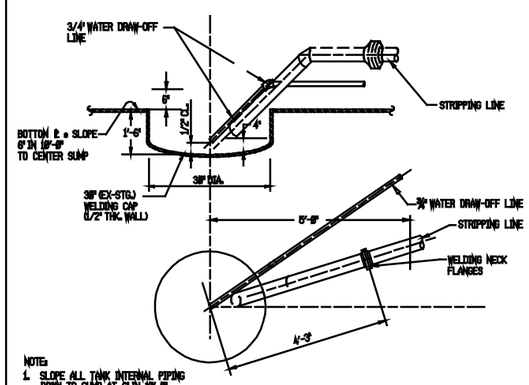

NOTE:
1. SLOPE ALL TANK INTERNAL PIPING DOWN TO SUMP AT 6" IN 10'-0"

SUMP PIPING
N.T.S.

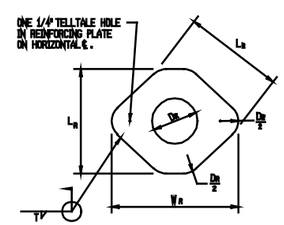

REINFORCING PLATE
N.T.S.

NOTES:
1. CURVATURE OF PLATE TO MATCH SHELL
2. SEE TABLE 1 ON SHEET 22 FOR SHELL NOZZLE DIMENSIONS.

Symbol	Description	Date	Approved
	Revisions		

U.S. ARMY ENGINEER DIVISION, HUNTSVILLE
CORPS OF ENGINEERS
HUNTSVILLE, ALABAMA

Site adapt A/E :

US Army Corps of Engineers

STANDARD FUELING SYSTEMS
ABOVEGROUND VERTICAL STEEL TANKS WITH FLOATING PANS & FIXED ROOFS

APPURTENANCES & FITTINGS

Dwn. by: CWL | Ckd. by: SLW

Reviewed by :

Approved by :

Date : FEB 93

Drawing code : AW 78-24-27

Sheet reference number : 21

Design file no.:

Rev.

Sheet 21 of 24

5 | 4 | 3 | 2 | 1