CORPS OF ENGINEERS | 4 | 3 | 2 | 1 | U.S. ARMY

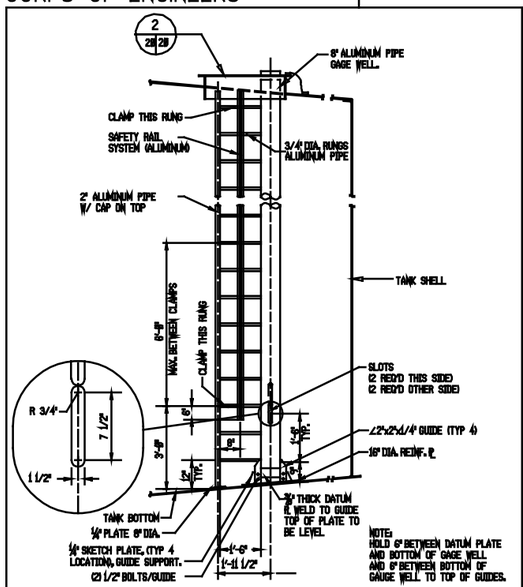

ACCESS LADDER
N.T.S.

NOTE:
1. PROVIDE TWO-2 1/2" SCH. 40 PIPES x 2 1/2" LG. FOR REMOVABLE EXTENSION STORAGE. MOUNT PIPES ON SPIRAL STAIRWAY HANDRAILS.

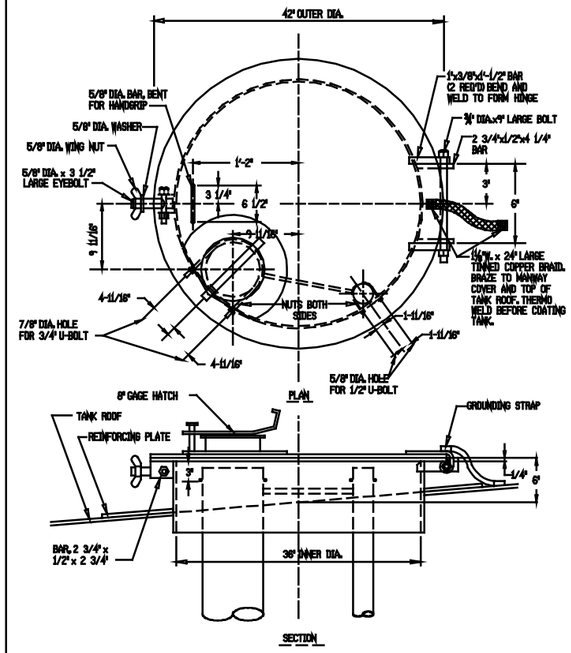

ROOF MANWAY
N.T.S.

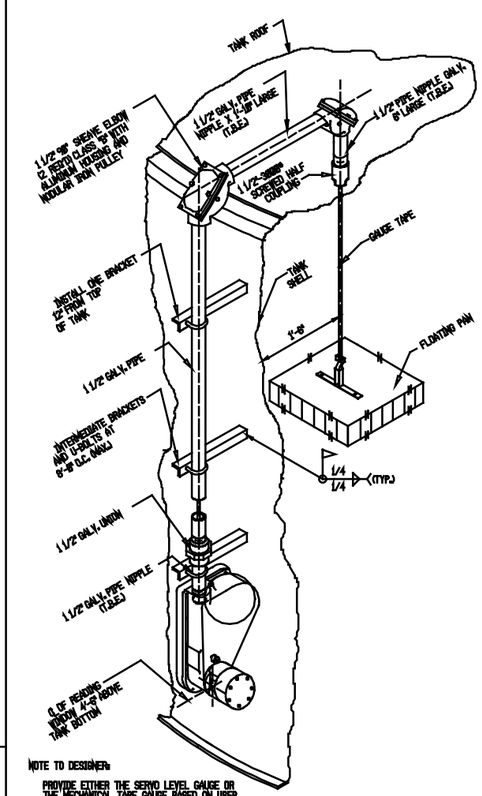

NOTE TO DESIGNER:
PROVIDE EITHER THE SERVO LEVEL GAUGE OR THE MECHANICAL TAPE GAUGE BASED ON USER REQUIREMENTS.

AUTOMATIC TANK LEVEL GAUGE
N.T.S. (MECHANICAL TAPE GAUGE)

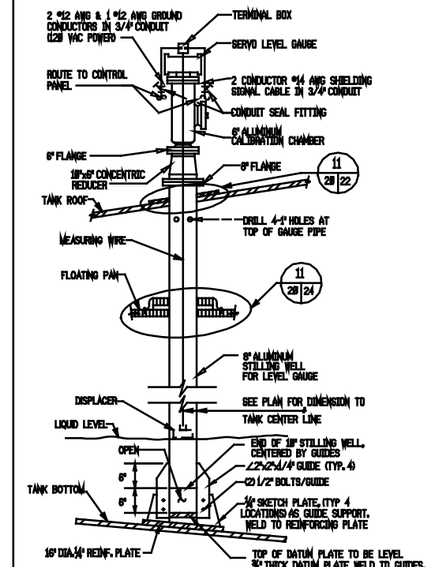

AUTOMATIC TANK LEVEL GAUGE
N.T.S. (SERVO LEVEL GAUGE)

TABLE 1	
ACTUATION POINT	
TANK	DISTANCE FROM TANK BOTTOM

NOTE:
1. BOTTOM OF TANK IS DEFINED AS ELEVATION OF TANK BOTTOM PLATE AT SHELL JOINT.
2. SADT WILL BE REQUIRED TO DETERMINE THE ACTUATION POINT FOR EACH TANK.

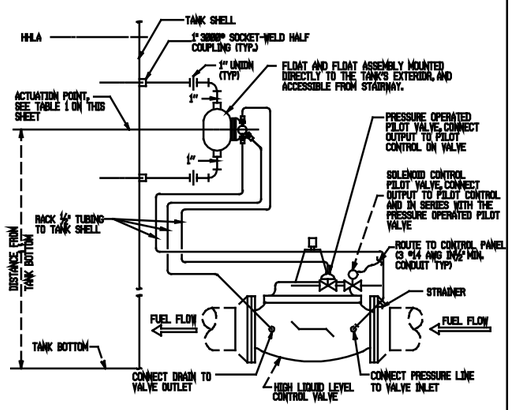

HIGH LIQUID LEVEL CONTROL SCHEMATIC
N.T.S.

NOTE:
1. EXTERIOR MOUNTED FLOAT (SHOWN ABOVE) SHALL BE ACCESSIBLE FROM TANK STAIRWAY.

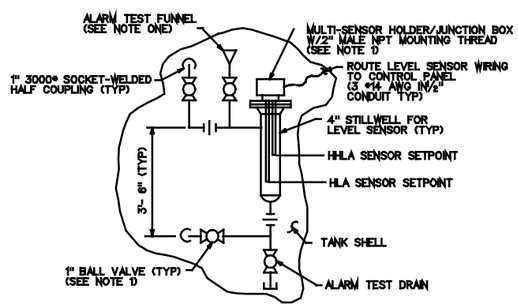

TYPICAL HIGH (HLA) AND HIGH-HIGH (HHLA) LEVEL ALARM SENSORS INSTALLATION
N.T.S.

NOTES:
1. LOCATE ITEMS TO BE ACCESSIBLE FROM STAIRWAY.
2. SEE TABLE 2 ON THIS SHEET FOR THE HHLA AND THE HLA SETPOINT LOCATIONS.

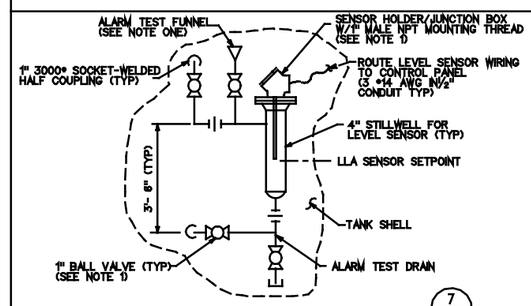

TYPICAL LOW (LLA) LEVEL ALARM SENSOR INSTALLATION
N.T.S.

NOTE:
1. SEE TABLE 2 ON THIS SHEET FOR THE LLA SETPOINT LOCATION.

SADT NOTE:
1. LOW LEVEL ALARM SETPOINT MUST BE VERIFIED FOR EACH INSTALLATION. SET POSITION OF LLA TO PROVIDE A MINIMUM NET POSITIVE SUCTION HEAD (AVAILABLE), NPSH (A) OF 20 FT. OF PRODUCT AT THE SUCTION OF THE FUEL TRANSFER PUMP BASED ON FLOWRATE, PIPE SIZE, FRICTION LOSS, AND VAPOR PRESSURE.

TABLE 2					
LEVEL ALARM DISTANCE FROM BOTTOM OF TANK					
TANK SIZE	SETPOINT LOCATION				REMARKS
	LLLA	LLA	HLA	HHLA	
2,500	NOT USED	2'-3"	23'-3"	24'-9"	
5,000	NOT USED	2'-3"	35'-4"	36'-5"	
10,000	NOT USED	2'-3"	36'-10"	37'-9"	
25,000	NOT USED	2'-3"	42'-9"	44'-1"	
55,000	NOT USED	2'-3"	43'-1"	44'-5"	
60,000	NOT USED	2'-3"	43'-3"	44'-8"	
100,000	NOT USED	2'-3"	43'-5"	44'-10"	

NOTE: 1. BOTTOM OF TANK IS DEFINED AS ELEVATION OF TANK BOTTOM PLATE AT SHELL JOINT.

Symbol	Description	Date	Approved
	Revisions		

U.S. ARMY ENGINEER DIVISION, HUNTSVILLE
CORPS OF ENGINEERS
HUNTSVILLE, ALABAMA

Site adapt A/E :

US Army Corps of Engineers

STANDARD FUELING SYSTEMS ABOVEGROUND VERTICAL STEEL TANKS WITH FLOATING PANS & FIXED ROOFS

APPURTENANCES & FITTINGS

Dwn. by: CWL	Ckd. by: SLW		
Reviewed by :	Date : FEB 93	Sheet reference number : 20	Design file no.:
Approved by :	Drawing code : AW 78-24-27		Rev.
			Sheet 20 of 24

5 | 4 | 3 | 2 | 1