CORPS OF ENGINEERS | 4 | 3 | 2 | 1 U.S. ARMY

STAIR ORIENTATION SCHEDULE				
TANK CAPACITY IN BARRELS	A	B	C	REMARKS
2,500	0°	95.65°	138.33°	
5,000	315°	85.61°	113°	
10,000	0°	95.75°	116.25°	
25,000	0°	132.2°	149.67°	
55,000	90°	145.7°	154.83°	
80,000	110°	156.25°	163.82°	
100,000	110°	173.4°	188.2°	

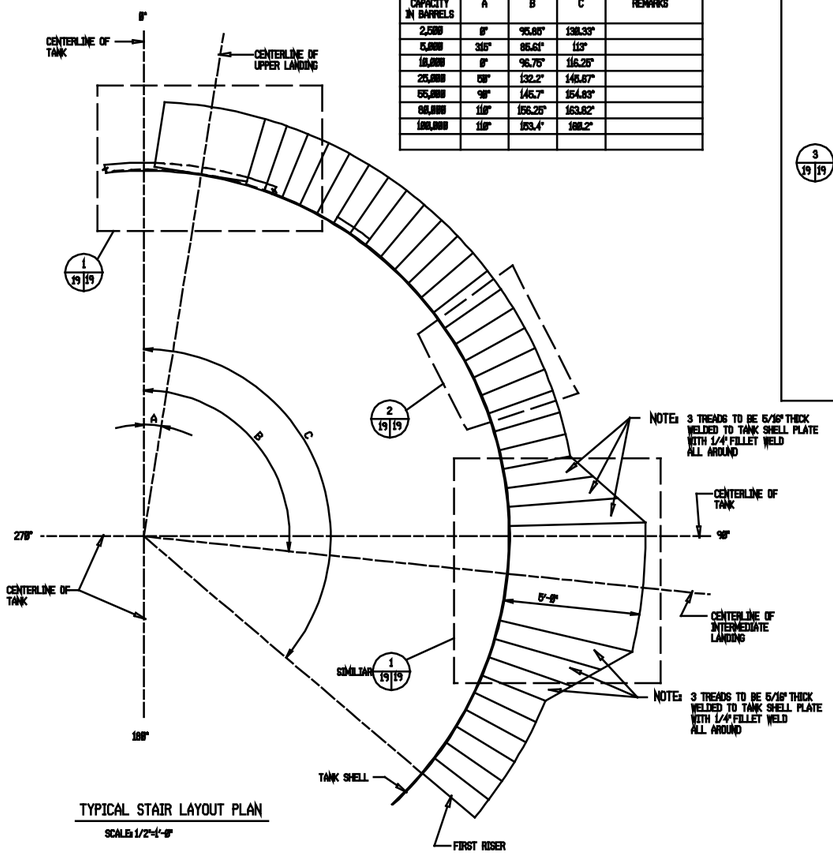

TYPICAL STAIR LAYOUT PLAN
SCALE: 1/2"=1'-0"

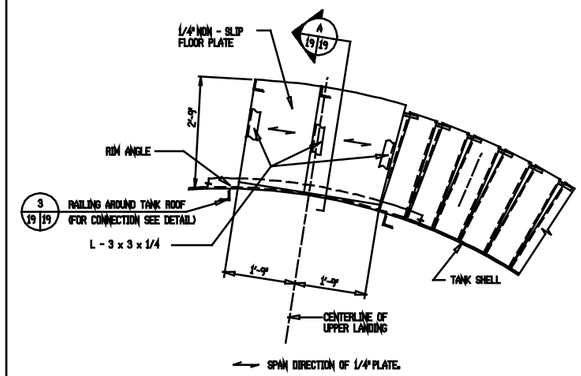

DETAIL 1 19|19
SCALE: 3/4"=1'-0"

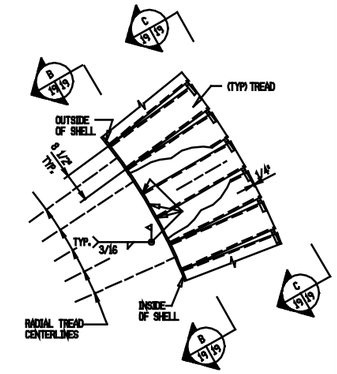

DETAIL 2 19|19
SCALE: 3/4"=1'-0"

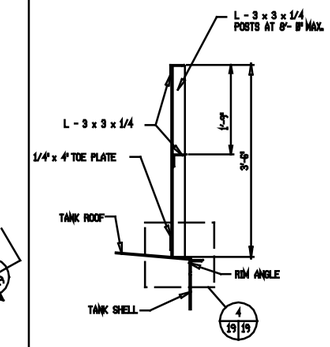

DETAIL 3 19|19
SCALE: 1"=1'-0"

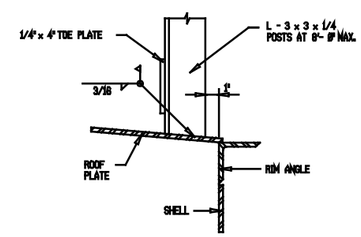

DETAIL 4 19|19
SCALE: 3"=1'-0"

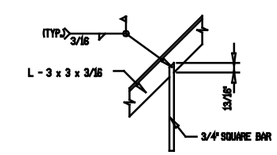

DETAIL 5 19|19
SCALE: 1 1/2"=1'-0"

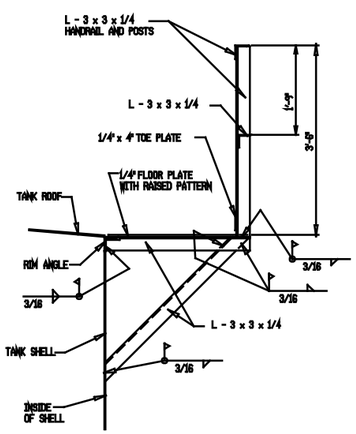

SECTION A 19|19
SCALE: 1"=1'-0"

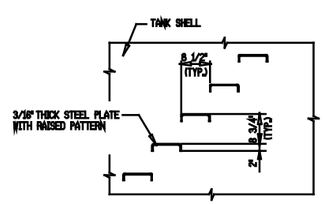

SECTION B 19|19
SCALE: 3/4"=1'-0"

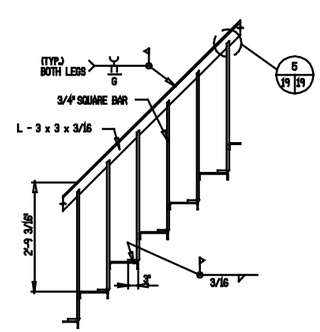

SECTION C 19|19
SCALE: 3/4"=1'-0"

GRAPHIC SCALES

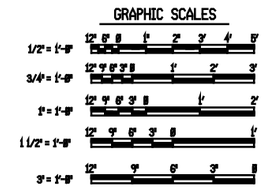

Symbol	Description	Date	Approved
	Revisions		

U.S. ARMY ENGINEER DIVISION, HUNTSVILLE
CORPS OF ENGINEERS
HUNTSVILLE, ALABAMA

Site adapt A/E :

US Army Corps of Engineers

STANDARD FUELING SYSTEMS
ABOVEGROUND VERTICAL STEEL TANKS
WITH FLOATING PANS & FIXED ROOFS

TANK STAIRS

Dwn. by: CWL | Ckd. by: SLW

Reviewed by :

Approved by :

Date : FEB 93

Drawing code : AW 78-24-27

Sheet reference number : 19

Design file no.:

Rev.

Sheet 19 of 24

5 | 4 | 3 | 2 | 1

E D C B A