CORPS OF ENGINEERS | 4 | 3 | 2 | 1 U.S. ARMY

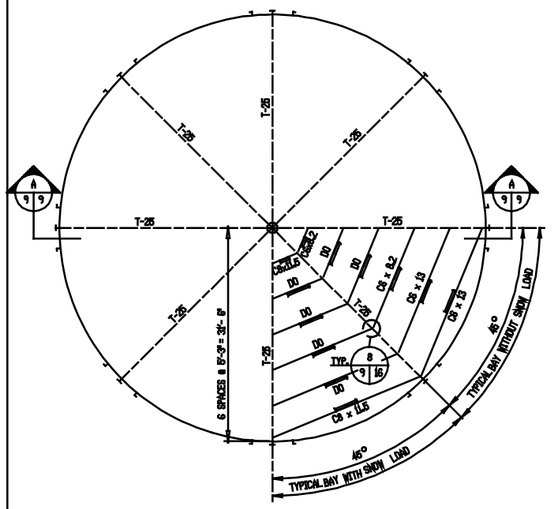

ROOF FRAMING PLAN

SCALE: 1/8" = 1'-0"

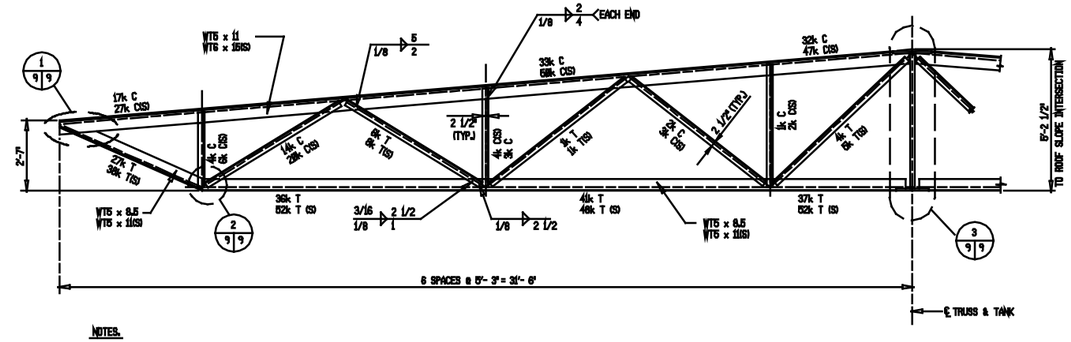

NOTES:

1. DIAGONALS AND VERTICALS 2 ⊤ 2 1/2 x 2 x 3/16 UNLESS NOTED.
2. MARK (S) ON THIS SHEET DENOTES SIZES, LOADS AND DIMENSIONS FOR SNOW LOAD DESIGN ONLY. WELD SYMBOLS SHOWN REPRESENT BOTH SNOW AND LIVE LOAD CONDITIONS UNLESS OTHERWISE NOTED.

ELEVATION TRUSS T-25

SCALE: 1/2" = 1'-0"

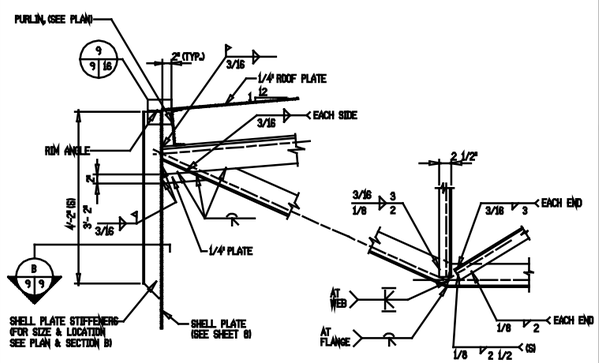

DETAIL 1

SCALE: 1" = 1'-0"

DETAIL 2

SCALE: 1" = 1'-0"

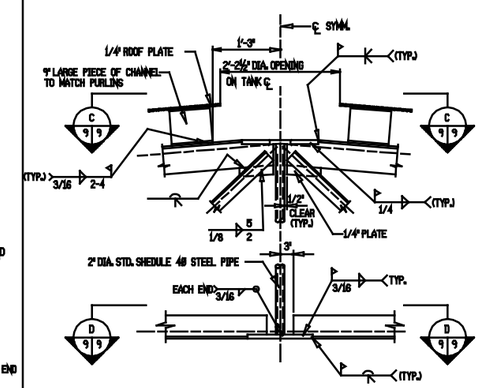

DETAIL 3

SCALE: 1" = 1'-0"

STRUCTURAL STEEL NOTE:

1. BOTTOM PLATES THICKNESS SHALL BE MINIMUM 5/16", WHICH INCLUDES A CORROSION ALLOWANCE OF 1/16". THE SHELL PLATE AND ROOF PLATE THICKNESSES SHOWN INCLUDE A 1/16" CORROSION ALLOWANCE.

GRAPHIC SCALES

1/8" = 1'-0": 8" 4' 8 8' 16'

1/2" = 1'-0": 12" 6" 8 1' 2' 3' 4' 5'

1" = 1'-0": 12" 9" 6" 3" 8 1' 2'

6" = 1'-0": 12" 11" 10" 9" 8" 7" 6"

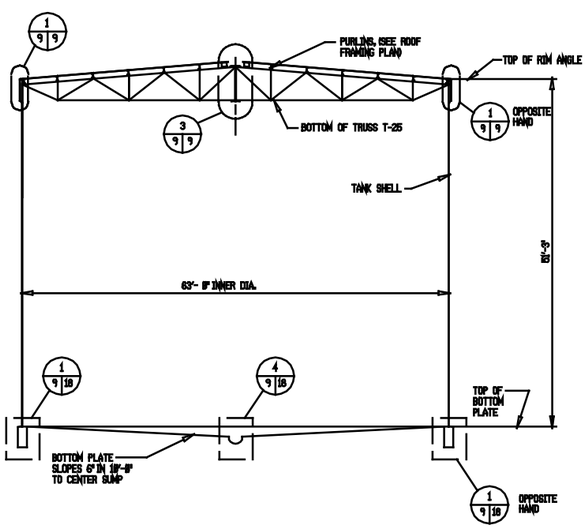

SECTION A

SCALE: 1/8" = 1'-0"

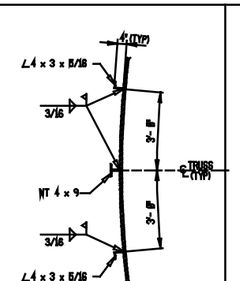

SECTION B

SCALE: 1/2" = 1'-0"

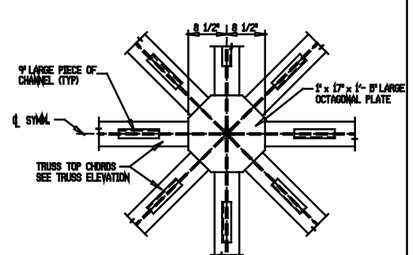

NOTE: ROOF PLATES NOT SHOWN FOR CLARITY.

SECTION C

SCALE: 1" = 1'-0"

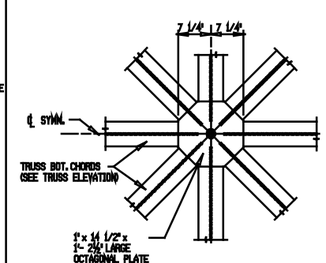

SECTION D

SCALE: 1" = 1'-0"

Symbol	Description	Date	Approved
	Revisions		

U.S. ARMY ENGINEER DIVISION, HUNTSVILLE
CORPS OF ENGINEERS
HUNTSVILLE, ALABAMA

Site adapt A/E:

US Army Corps of Engineers

STANDARD FUELING SYSTEMS
ABOVEGROUND VERTICAL STEEL TANKS
WITH FLOATING PANS & FIXED ROOFS

SECTIONS, DETAILS, & ROOF PLAN

(25,000 BARREL TANK)

Dwn. by: CWL | Ckd. by: SLW

Reviewed by:

Approved by:

Date: FEB 93

Drawing code: AW 78-24-27

Sheet reference number: 9

Design file no.:

Rev.

Sheet 9 of 24

5 | 4 | 3 | 2 | 1

E D C B A