CORPS OF ENGINEERS | 4 | 3 | 2 | 1 U.S. ARMY

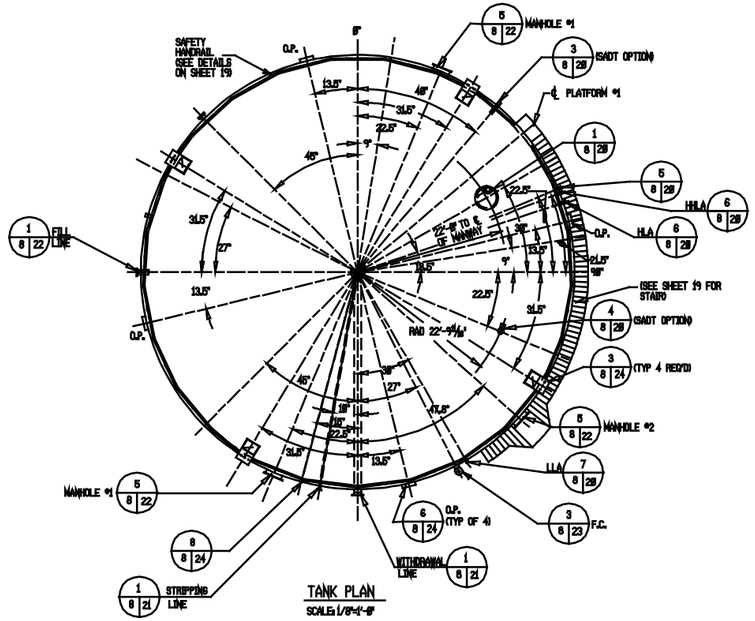

TANK PLAN
SCALE: 1/8"=1'-0"

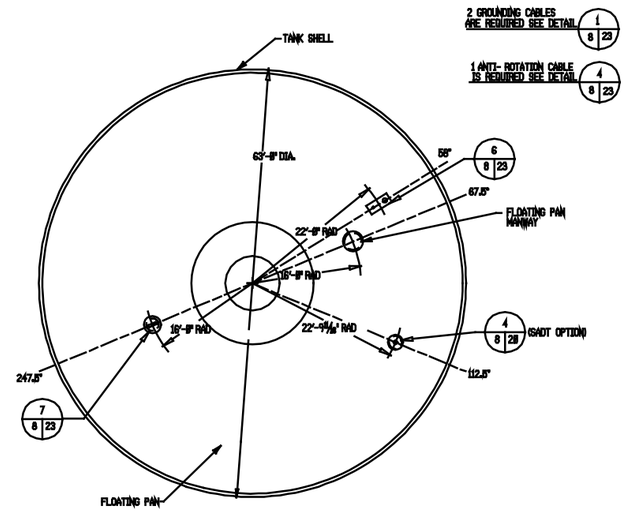

INTERNAL FLOATING PAN LAYOUT
SCALE: 1/8"=1'-0"

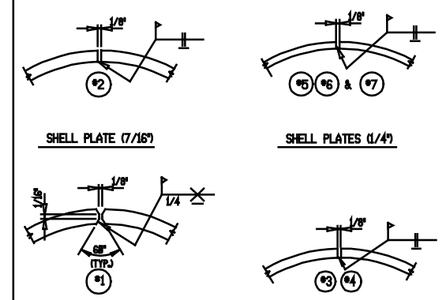

SHELL PLATE (7/16")
SHELL PLATES (1/4")
SHELL PLATE (1/2")
SHELL PLATES (5/16")

TANK SHELL PLATES THICKNESS
N.T.S.

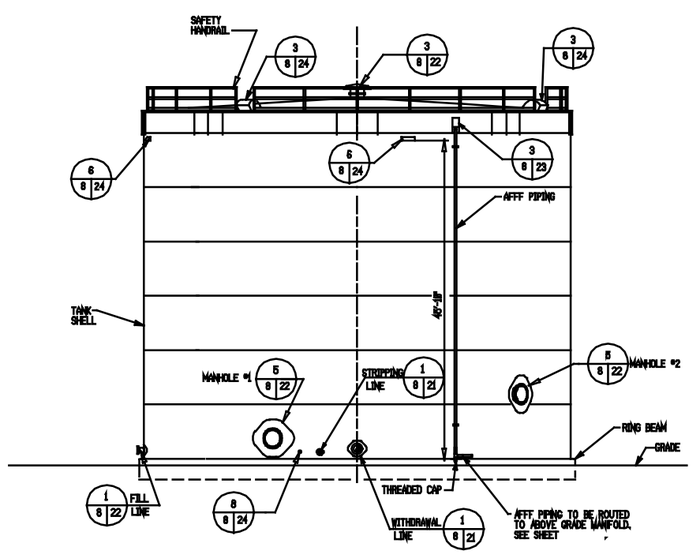

TANK ELEVATION
SCALE: 1/8"=1'-0"

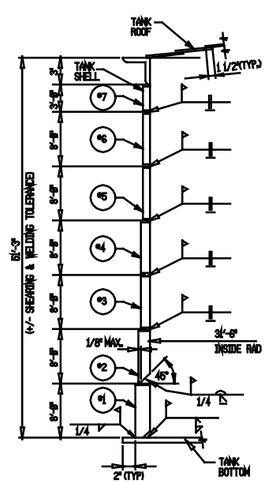

SHELL PLATES THICKNESS & WELDING DETAILS
N.T.S.

GRAPHIC SCALES
1/8" = 1'-0"

FLOW RATE TABLE		
TANK	MAXIMUM FILL (GPM)	MAXIMUM WITHDRAWAL (GPM)

SPECIAL NOTE:

THE CONTRACTOR SHALL UTILIZE A COMPUTER DESIGN PACKAGE TO DESIGN STORAGE TANKS IN ACCORDANCE WITH API-650. API-650 SHALL BE THE GOVERNING DOCUMENT IN ALL PHASES OF TANK DESIGN. TANK DESIGNS SHALL BE CERTIFIED BY A PROFESSIONAL STRUCTURAL ENGINEER.

Symbol	Description	Date	Approved
	Revisions		

U.S. ARMY ENGINEER DIVISION, HUNTSVILLE
CORPS OF ENGINEERS
HUNTSVILLE, ALABAMA

Site adapt A/E :

US Army Corps of Engineers

STANDARD FUELING SYSTEMS ABOVEGROUND VERTICAL STEEL TANKS WITH FLOATING PANS & FIXED ROOFS

PLAN & PAN LAYOUT

(25,000 BARREL TANK)

Dwn. by: CWL | Ckd. by: SLW

Reviewed by :

Approved by :

Date : FEB 93

Drawing code : AW 78-24-27

Sheet reference number : 8

Design file no.:

Rev.

Sheet 8 of 24

5 | 4 | 3 | 2 | 1