CORPS OF ENGINEERS | 4 | 3 | 2 | 1 | U.S. ARMY

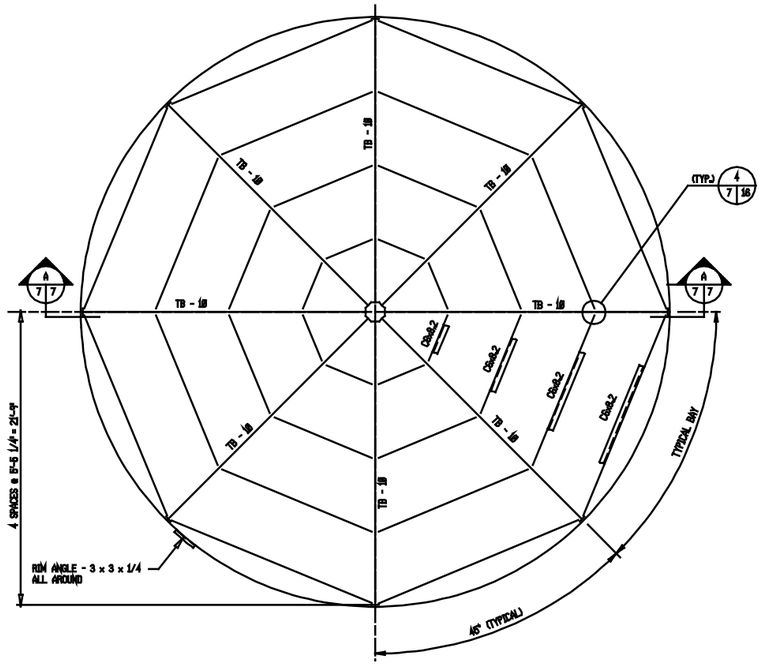

ROOF FRAMING PLAN
SCALE: 1/4" = 1'- 0"

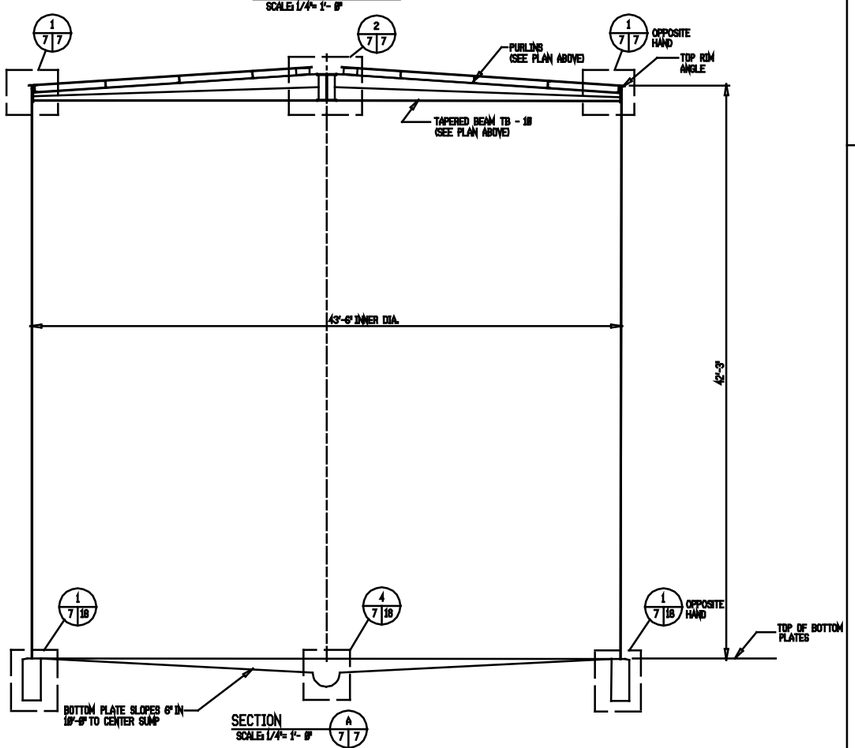

SECTION A 7|7
SCALE: 1/4" = 1'- 0"

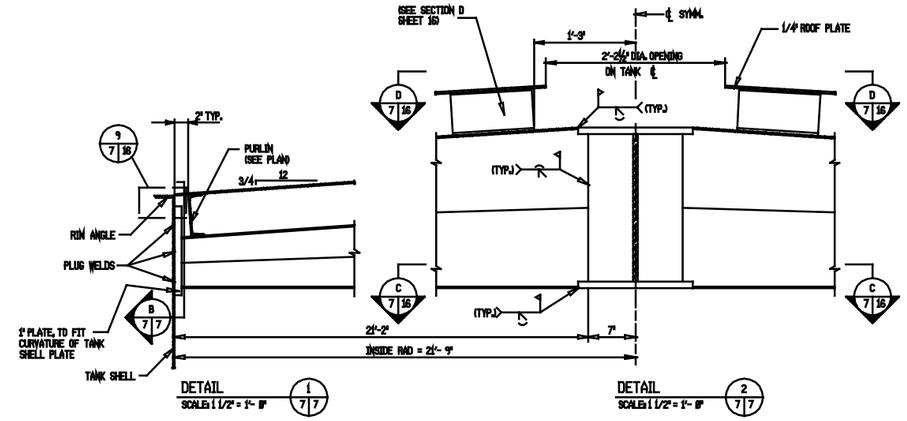

DETAIL 1 7|7
SCALE: 1 1/2" = 1'- 0"

DETAIL 2 7|7
SCALE: 1 1/2" = 1'- 0"

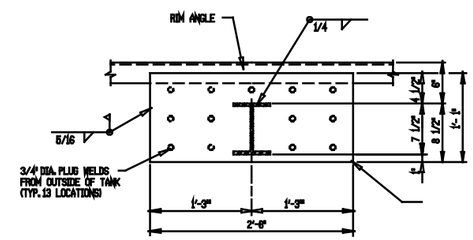

SECTION B 7|7
SCALE: 1 1/2" = 1'- 0"

STRUCTURAL STEEL NOTE:

1. BOTTOM PLATES THICKNESS SHALL BE MINIMUM 5/16", WHICH INCLUDES A CORROSION ALLOWANCE OF 1/16". THE SHELL PLATE AND ROOF PLATE THICKNESSES SHOWN INCLUDE A 1/16" CORROSION ALLOWANCE.

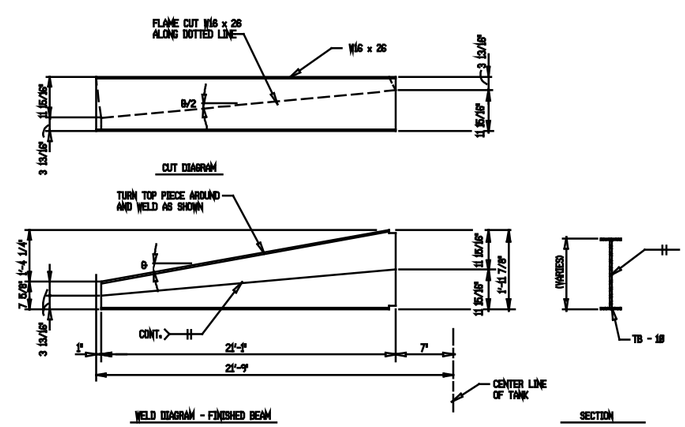

FABRICATION DETAILS (TAPER BEAM TB - 10)
N.T.S.

GRAPHIC SCALES

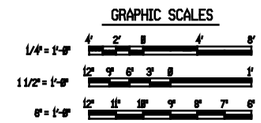

Symbol	Description	Date	Approved
	Revisions		

U.S. ARMY ENGINEER DIVISION, HUNTSVILLE
CORPS OF ENGINEERS
HUNTSVILLE, ALABAMA

Site adapt A/E:

US Army Corps of Engineers

STANDARD FUELING SYSTEMS
ABOVEGROUND VERTICAL STEEL TANKS
WITH FLOATING PANS & FIXED ROOFS

SECTIONS, DETAILS, & ROOF PLAN
(10,000 BARREL TANK)

Dwn. by: CWL | Ckd. by: SLW

Reviewed by:

Approved by:

Date: FEB 93

Drawing code: AW 78-24-27

Sheet reference number: 7

Design file no.:

Rev.

Sheet 7 of 24