CORPS OF ENGINEERS | 4 | 3 | 2 | 1 U.S. ARMY

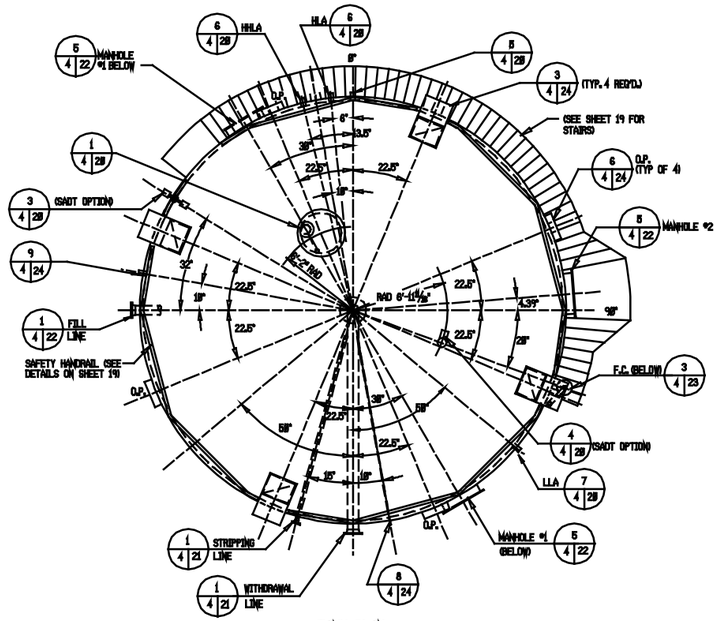

TANK PLAN

SCALE: 1/4"=1'-0"

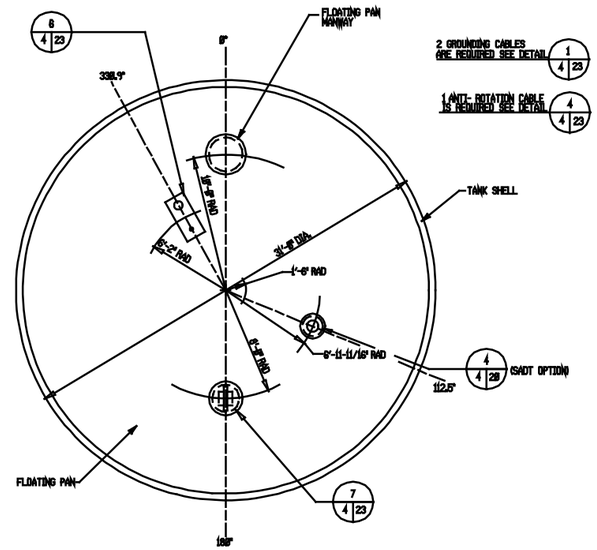

INTERNAL FLOATING PAN LAYOUT

SCALE: 1/4"=1'-0"

SHELL PLATE THICKNESS (IN.)		
PLATE NO.	SEISMIC ZONE 1	SEISMIC ZONE 2
6	1/4	1/4
5	1/4	1/4
4	1/4	1/4
3	1/4	3/8
2	1/4	1/2
1	1/4	5/8

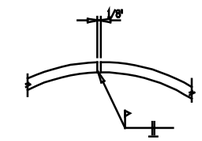

SHELL PLATES (TYP)

#1 thru #6

TANK SHELL PLATES THICKNESS

N.T.S.

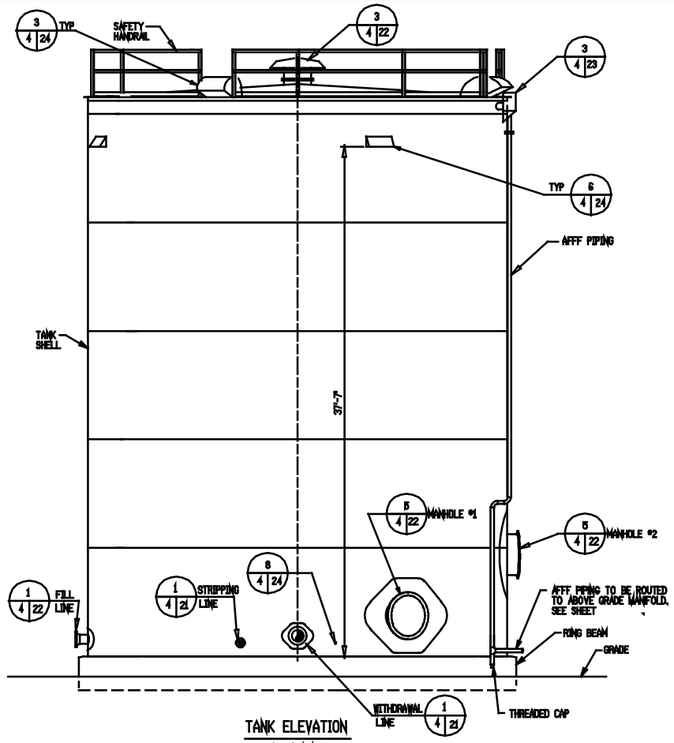

TANK ELEVATION

SCALE: 1/4"=1'-0"

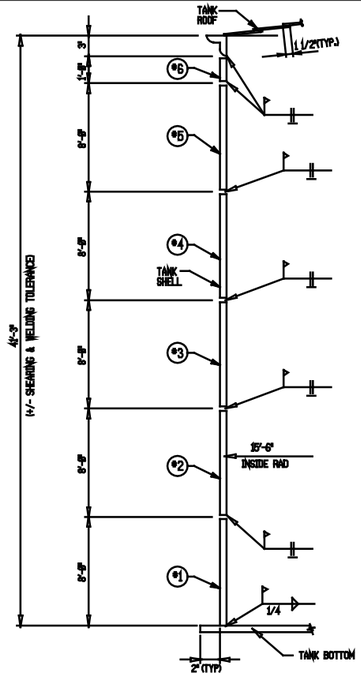

SHELL PLATES THICKNESS & WELDING DETAILS

N.T.S.

GRAPHIC SCALES

1/4" = 1'-0" 4' 2' 0 4' 8'

FLOW RATE TABLE		
TANK	MAXIMUM FILL (GPM)	MAXIMUM WITHDRAWAL (GPM)

SPECIAL NOTE:

THE CONTRACTOR SHALL UTILIZE A COMPUTER DESIGN PACKAGE TO DESIGN STORAGE TANKS IN ACCORDANCE WITH API-650. API-650 SHALL BE THE GOVERNING DOCUMENT IN ALL PHASES OF TANK DESIGN. TANK DESIGNS SHALL BE CERTIFIED BY A PROFESSIONAL STRUCTURAL ENGINEER.

Symbol	Description	Date	Approved
	Revisions		

U.S. ARMY ENGINEER DIVISION, HUNTSVILLE
CORPS OF ENGINEERS
HUNTSVILLE, ALABAMA

Site adapt A/E :

US Army Corps of Engineers

STANDARD FUELING SYSTEMS
ABOVEGROUND VERTICAL STEEL TANKS
WITH FLOATING PANS & FIXED ROOFS

PLAN & PAN LAYOUT
(5,000 BARREL TANK)

Dwn. by: CWL | Ckd. by: SLW

Reviewed by :

Approved by :

Date : FEB 93

Drawing code : AW 78-24-27

Sheet reference number : 4

Design file no.:

Rev.

Sheet 4 of 24

5 | 4 | 3 | 2 | 1

E D C B A