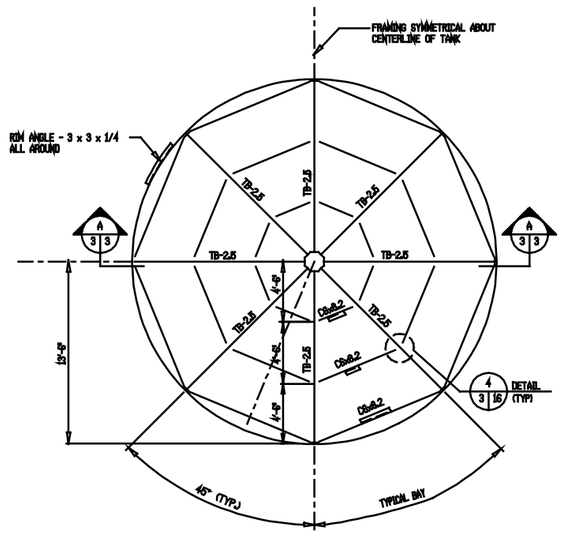

ROOF FRAMING PLAN
SCALE: 1/4" = 1'- 0"

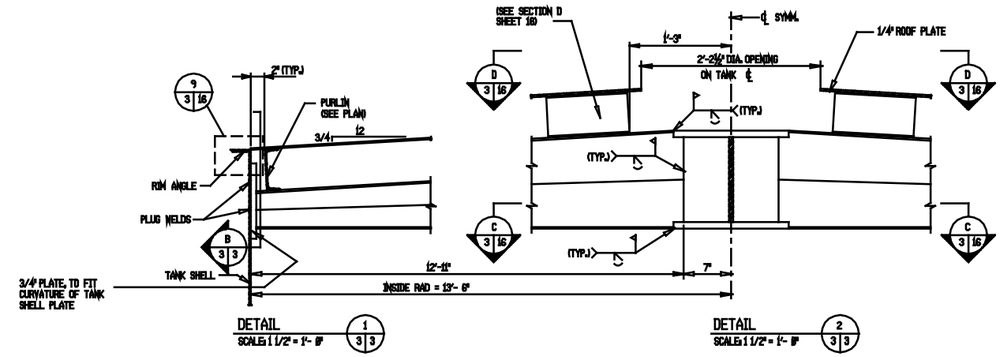

DETAIL 1 3|3
SCALE: 1 1/2" = 1'- 0"

DETAIL 2 3|3
SCALE: 1 1/2" = 1'- 0"

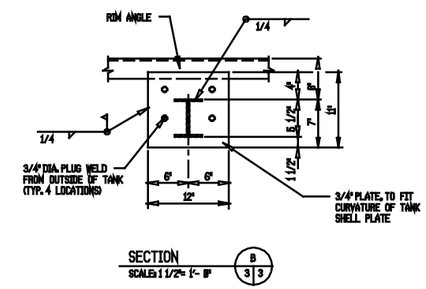

SECTION B 3|3
SCALE: 1 1/2" = 1'- 0"

STRUCTURAL STEEL NOTES:

1. BOTTOM PLATES THICKNESS SHALL BE MINIMUM 5/16", WHICH INCLUDES A CORROSION ALLOWANCE OF 1/16". THE SHELL PLATE AND ROOF PLATE THICKNESSES SHOWN INCLUDE A 1/16" CORROSION ALLOWANCE.

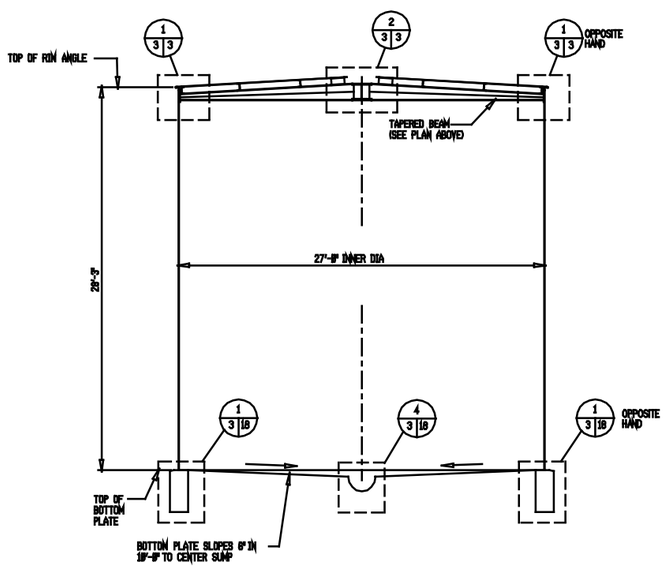

SECTION A 3|3
SCALE: 1/4" = 1'- 0"

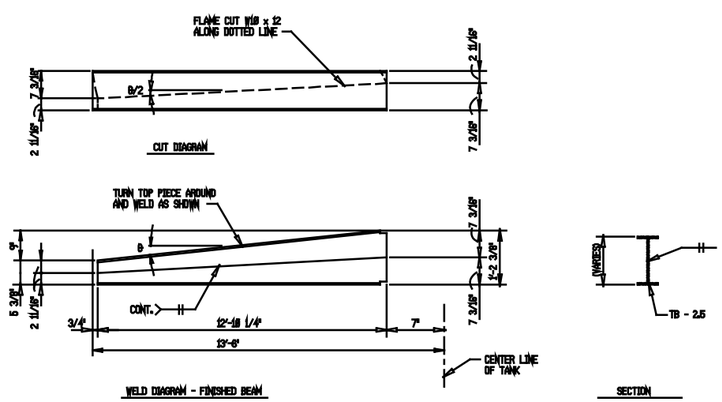

FABRICATION DETAILS (TAPER BEAM TB - 2.5)
N.T.S.

GRAPHIC SCALES

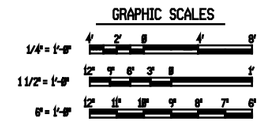

Symbol	Description	Date	Approved
	Revisions		

U.S. ARMY ENGINEER DIVISION, HUNTSVILLE
CORPS OF ENGINEERS
HUNTSVILLE, ALABAMA

Site adapt A/E :

US Army Corps of Engineers

STANDARD FUELING SYSTEMS
ABOVEGROUND VERTICAL STEEL TANKS
WITH FLOATING PANS & FIXED ROOFS

SECTIONS, DETAILS, & ROOF PLAN

(2,500 BARREL TANK)

Dwn. by: CWL	Ckd. by: SLW		
Reviewed by :	Date : FEB 93	Sheet reference number : 3	Design file no.:
Approved by :	Drawing code : AW 78-24-27		Rev.
			Sheet 3 of 24