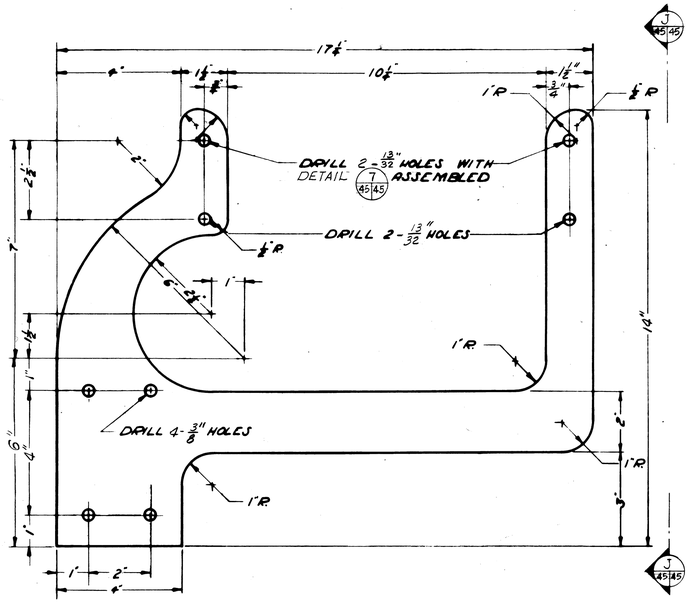

DETAIL 8 41/45
SCALE 1/2" = 1"

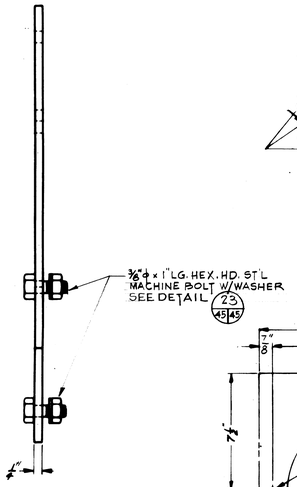

ELEVATION J 45/45
SCALE 1/2" = 1"

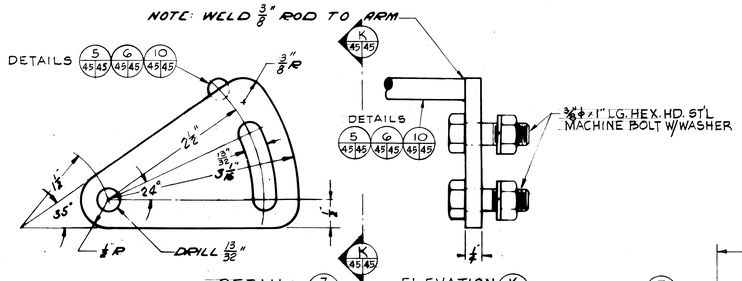

DETAIL 7 41/45 45
SCALE FULL SIZE

ELEVATION K 45/45
SCALE FULL SIZE

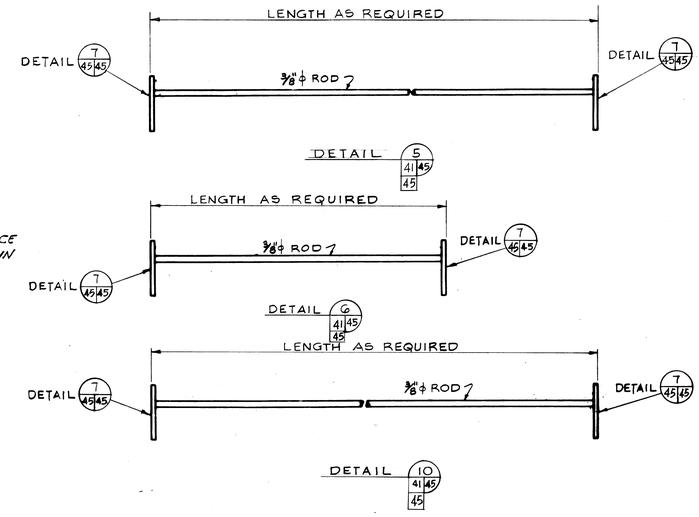

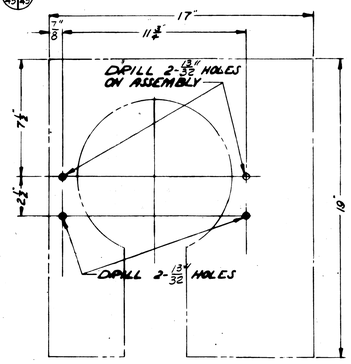

DETAIL 21 45/45
SCALE 1/4" = 1"

NOTE:
DRILL HOLES IN ENTRANCE & EXIT PLATES AS SHOWN IN DETAIL 21 45/45

NOTE:
ALL MATERIAL TO BE A.I.S.I. C1018.

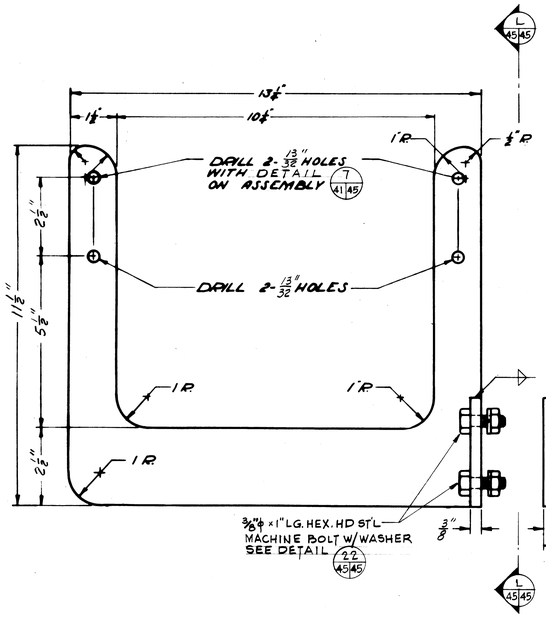

DETAIL 4 41/45
SCALE 1/2" = 1"

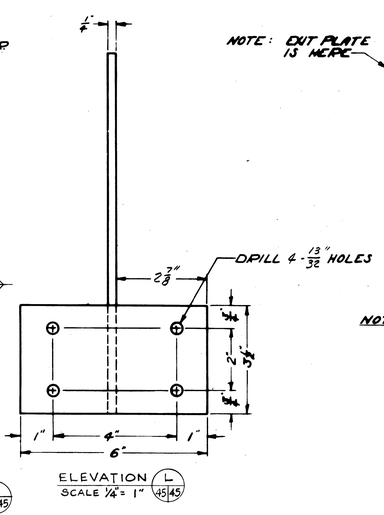

ELEVATION L 45/45
SCALE 1/4" = 1"

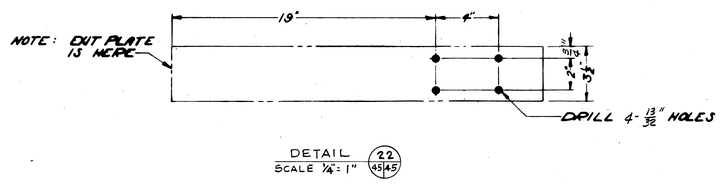

DETAIL 22 45/45
SCALE 1/4" = 1"

NOTE: DRILL HOLES IN CONVEYOR SUPPORT FRAME AS SHOWN

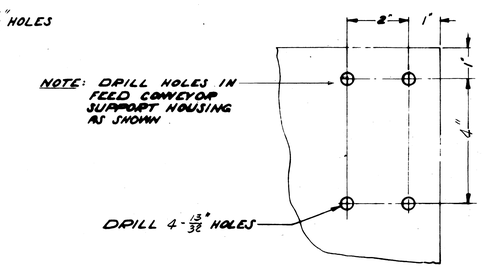

DETAIL 23 45/45
SCALE 1/2" = 1"

GRAPHIC SCALE

1/4" = 1"
1/2" = 1"
1" = 1"

ADAPTED FROM U.F.S.O.D. No. 1029 M5-7

SYMBOL	DESCRIPTION	DATE	APPROVAL
1	ADDED NOTATION FOR DETAIL 4	6/22/66	

REVISIONS

AMMANN & WHITNEY
CONSULTING ENGINEERS
111-8TH AVENUE, NEW YORK, N.Y.

DEPARTMENT OF THE ARMY
OFFICE OF THE CHIEF OF ENGINEERS
MILITARY CONSTRUCTION - ENGINEERING DIVISION
WASHINGTON, D.C.

DRAWN BY: G.C.
TRACED BY: G.C.
CHECKED BY: M.S.A.
SUBMITTED BY: AMMANN & WHITNEY
APPROVED: CHIEF, M. & P.S. BRANCH

AMMUNITION MAINTENANCE FACILITY
AMMUNITION MAINTENANCE BUILDING
ABRASIVE BLAST MACHINE
CONVEYOR GUIDE ROD DETAILS

APPROVED: CHIEF ENGINEERING DIVISION, MIL. CONSTR. O.C.E.
DATE: 18 JULY 1966

TOLERANCE & DIMENSIONS EXCEPT AS NOTED
FROM FINISHED SURFACES
DECIMAL ±
FRACTIONAL ±
ANGULAR ±
FROM UNFINISHED SURFACES
FRACTIONAL ±
ANGULAR ±
SHARP CORNERS & EDGES

APPROVED FOR
DATE:

SCALE AS NOTED
SPEC. NO. 16-06-324-66-02
DRAWING NUMBER 35-69-09
SHEET 45 OF 45