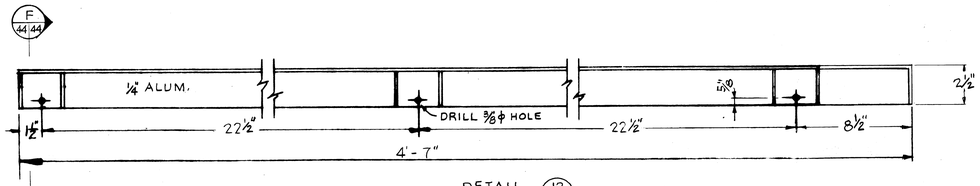

DETAIL 12 43|44 OPPOSITE HAND

DETAIL 11 43|44 AS SHOWN
SCALE 1/4" = 1"

FEED CONVEYOR GUARD RAIL

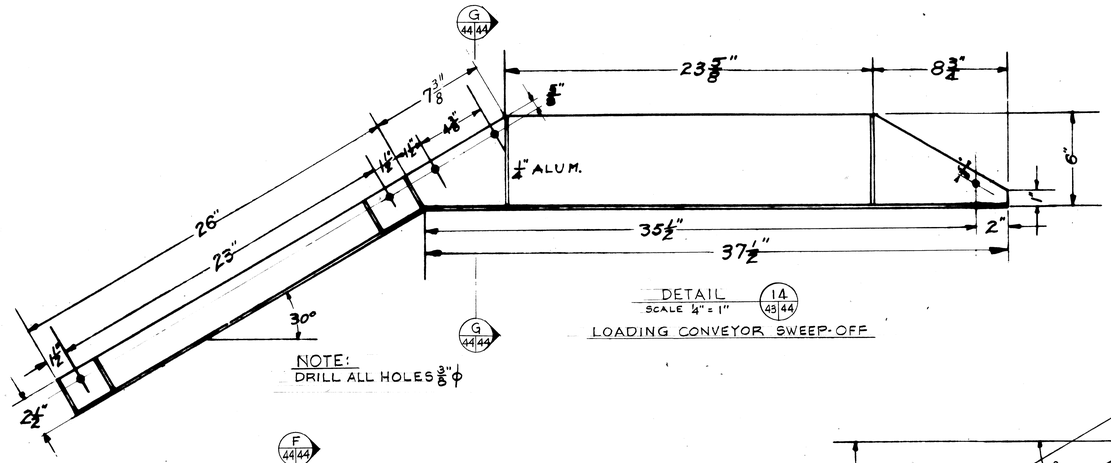

NOTE:
DRILL ALL HOLES 3/8" ϕ

DETAIL 14 43|44
SCALE 1/4" = 1"

LOADING CONVEYOR SWEEP-OFF

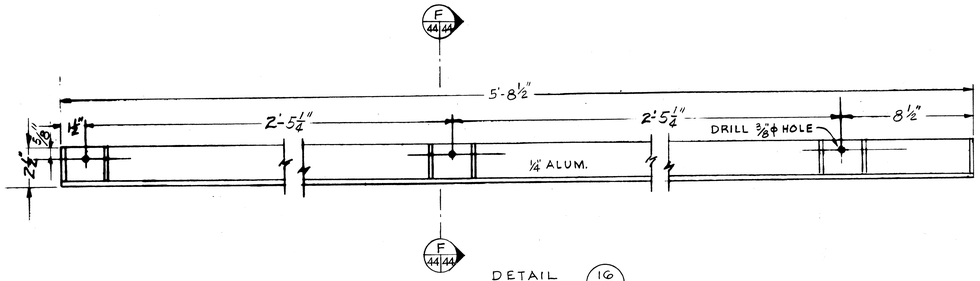

DETAIL 16 43|44
SCALE 1/4" = 1"

TAKE-OFF CONVEYOR GUARD RAIL

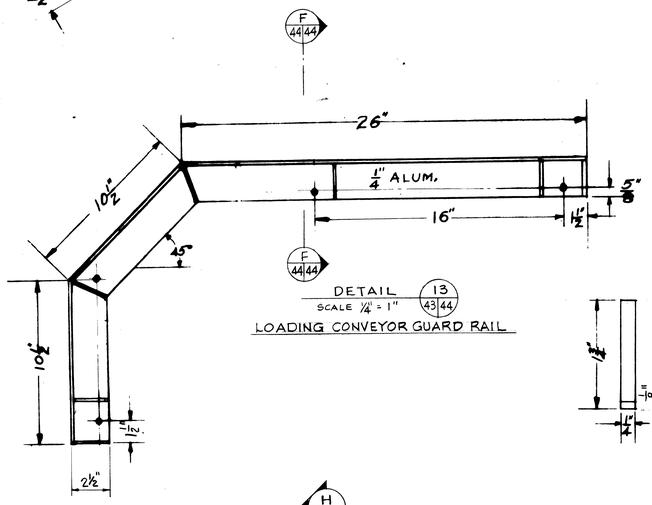

DETAIL 13 43|44
SCALE 1/4" = 1"

LOADING CONVEYOR GUARD RAIL

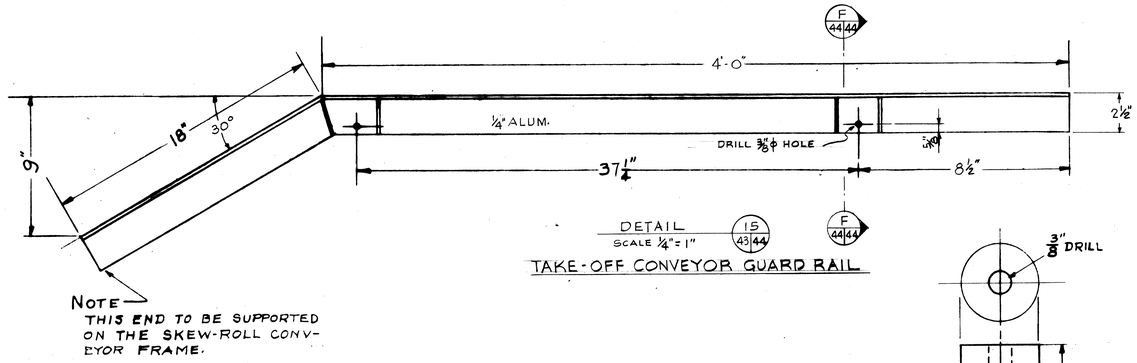

NOTE—
THIS END TO BE SUPPORTED ON THE SKEW-ROLL CONVEYOR FRAME.

DETAIL 15 43|44
SCALE 1/4" = 1"

TAKE-OFF CONVEYOR GUARD RAIL

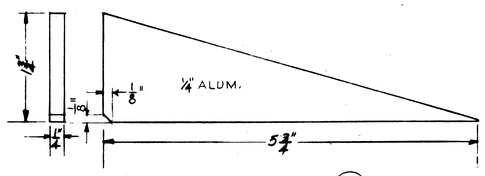

DETAIL 17 44|44
SCALE FULL SIZE

GUARD RAIL FIN

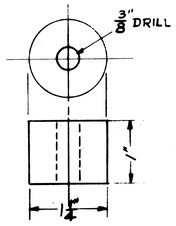

DETAIL 19 44|44
SCALE FULL SIZE

SPACER

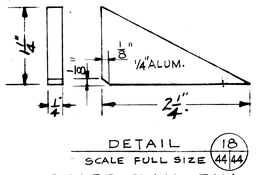

DETAIL 18 44|44
SCALE FULL SIZE

GUARD RAIL FIN

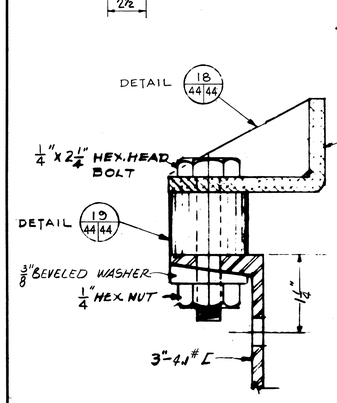

SECTION F 43|44 44
SCALE FULL SIZE

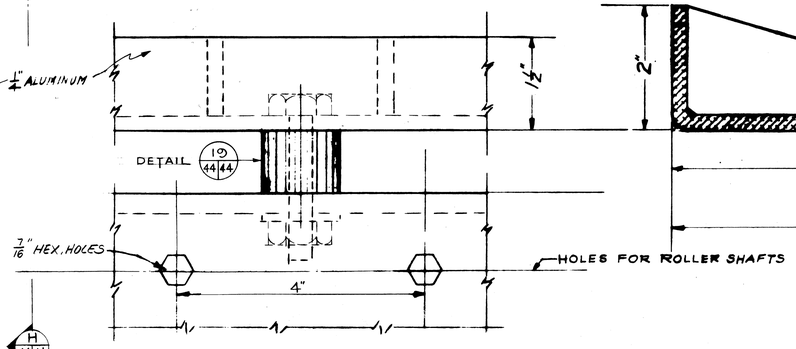

ELEVATION H 43|44 44
SCALE FULL SIZE

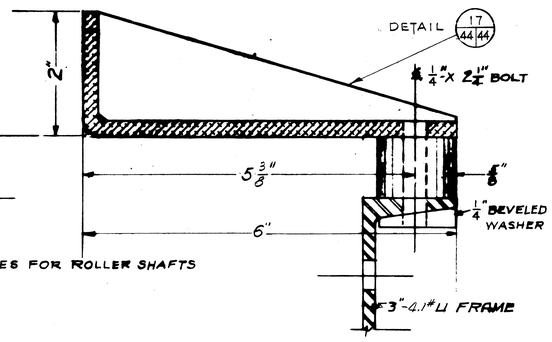

SECTION G 44|44
SCALE FULL SIZE

GRAPHIC SCALE

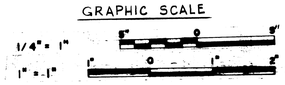

ADAPTED FROM W.F.S.O.D. No. 1029 M3-G

TOLERANCE & DIMENSIONS EXCEPT AS NOTED	
FROM FINISHED SURFACES	
DECIMAL	±
FRACTIONAL	±
ANGULAR	±
FROM UNFINISHED SURFACES	
FRACTIONAL	±
ANGULAR	±
SHARP CORNERS & EDGES BROKEN TO APPROX.	IN.

SYMBOL	DESCRIPTION	DATE	APPROVAL

REVISIONS

AMMANN & WHITNEY
CONSULTING ENGINEERS
111-8TH AVENUE, NEW YORK, N.Y.

DEPARTMENT OF THE ARMY
OFFICE OF THE CHIEF OF ENGINEERS
MILITARY CONSTRUCTION - ENGINEERING DIVISION
WASHINGTON, D.C.

DRAWN BY: G.C.
TRACED BY: G.C.
CHECKED BY: M.S.A.
SUBMITTED: BY AMMANN & WHITNEY
APPROVED: CHIEF W.A.P.S. BRANCH
APPROVED FOR
DATE:

AMMUNITION MAINTENANCE FACILITY

AMMUNITION MAINTENANCE BUILDING

ABRASIVE BLAST MACHINE

CONVEYOR GUARD RAIL DETAILS

APPROVED: CHIEF ENGINEERING DIVISION, MIL. CONSTR. O.C.E.
DATE: 18 JULY 1966
SCALE AS NOTED
SPEC. NO. J6-06324-66-CE
DRAWING NUMBER 35-69-09
SHEET 44 OF 45