BILL OF MATERIAL

DET. NO.	NO. REQ'D	DESCRIPTION	MAT'L	DRG. NO.
F-1	2	TOP RAILS 3"-4.1#E	STEEL	
F-2	6	LEGS DO	STEEL	
F-3	4	BOTTOM BRACE DO	STEEL	
F-4	6	X-BRACES DO	STEEL	
F-5	2	V-BRG. SUPT'S DO	STEEL	
F-6	4	BRG SUPT'S DO	STEEL	
F-7	1	MOTOR SUPT'S DO	STEEL	
F-8	3	PULLEY 6"DIA:16"F. 3/16" BORE	COMM'L	
F-9	1	PULLEY 8"DIA:16"F. 7/16" BORE	COMM'L	
F-10	6	1-3/16" BRGS	COMM'L	
F-11	2	1-7/16" BRGS	COMM'L	
F-12	3	1-3/16" CRS X 1'-10" LG. SHAFT	STEEL	
F-13	1	1-7/16" CRS X 2'-0" LG. SHAFT	STEEL	
F-14	1	MOTOR BASE ℞ - 3/16"	STEEL	
F-15	22 △1	3/16" GUSSET ℞	STEEL	
F-16	22	1.9 DIA X 16" LG. ROLLER	COMM'L	
F-17	1	16"-4 PLY BELT	COMM'L	

FEED CONVEYOR

△2 BILL OF MATERIAL

DET. NO.	NO. REQ'D	DESCRIPTION	MAT'L	DRG. NO.
T-1	2	TOP RAILS 3" - 4.1#C	STEEL	
T-2	2	LEGS DO	STEEL	
T-3	2	LEGS DO	STEEL	
T-4	2	BOTTOM BRACE DO	STEEL	
T-5	4	X BRACES DO	STEEL	
T-6	1 △1	V BRG. SUPTS. DO	STEEL	
T-7	2	BRG. SUPT'S DO 1'- 1" LG.	STEEL	
T-8	2	BRG. SUPT'S DO 1'- 4" LG.	STEEL	
T-9	1	MOTOR SUPT. 3" - 4.1# C 2'-9" LG. △1	STEEL	
T-10	1	PULLEY 8" DIA.X16" F. - 1-7/16" BORE	COMM'L	
T-11	3	PULLEYS 6" DIA X 16" F. X 1-3/16" BORE	COMM'L	
T-12	2	1-7/16" BRGS	COMM'L	
T-13	6	1-3/16" BRGS	COMM'L	
T-14	1	1-7/16" CRS. X 2' - 0" LG. SHAFT	STEEL	
T-15	3	1-3/16" CRS X 1' - 10" LG. SHAFT	STEEL	
T-16	1	MOTOR BASE ℞ 3/16"	STEEL	
T-17	14 △1	3/16" GUSSET ℞	STEEL	
T-18	15	1.9 DIA. X 16" LG. ROLLERS 7/16" HEX	COMM'L	
T-19	1	16" - 4 PLY BELT 16'-6" LG.	COMM'L	

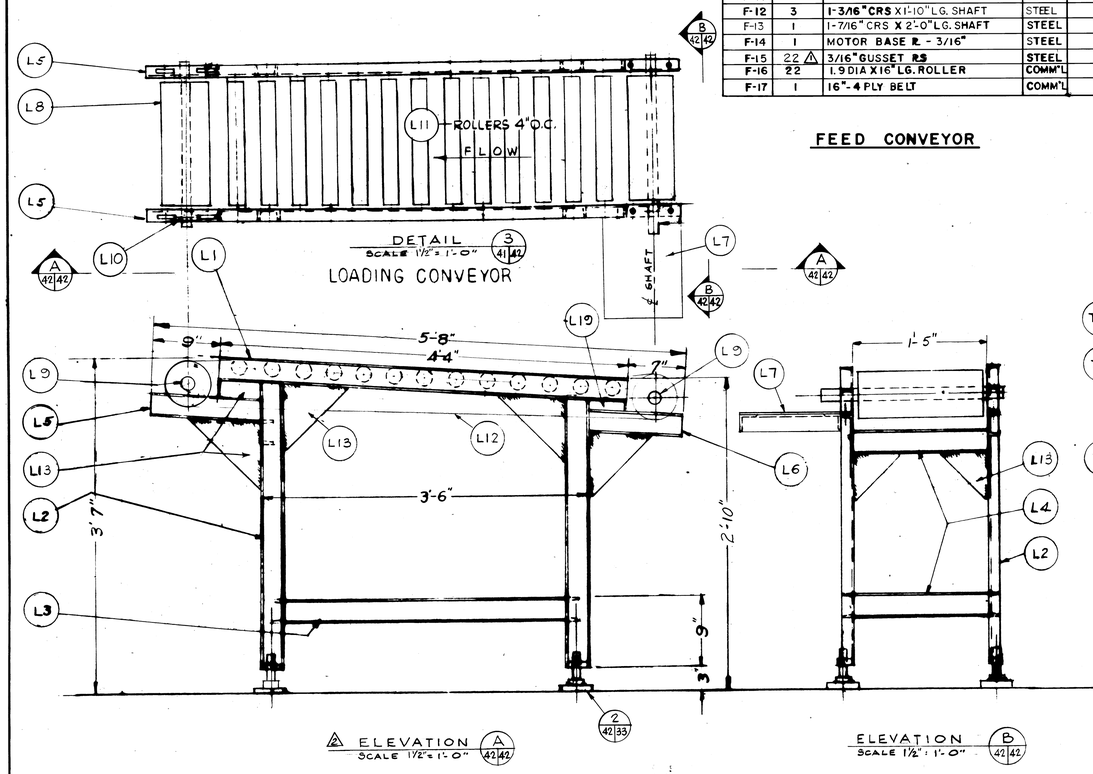

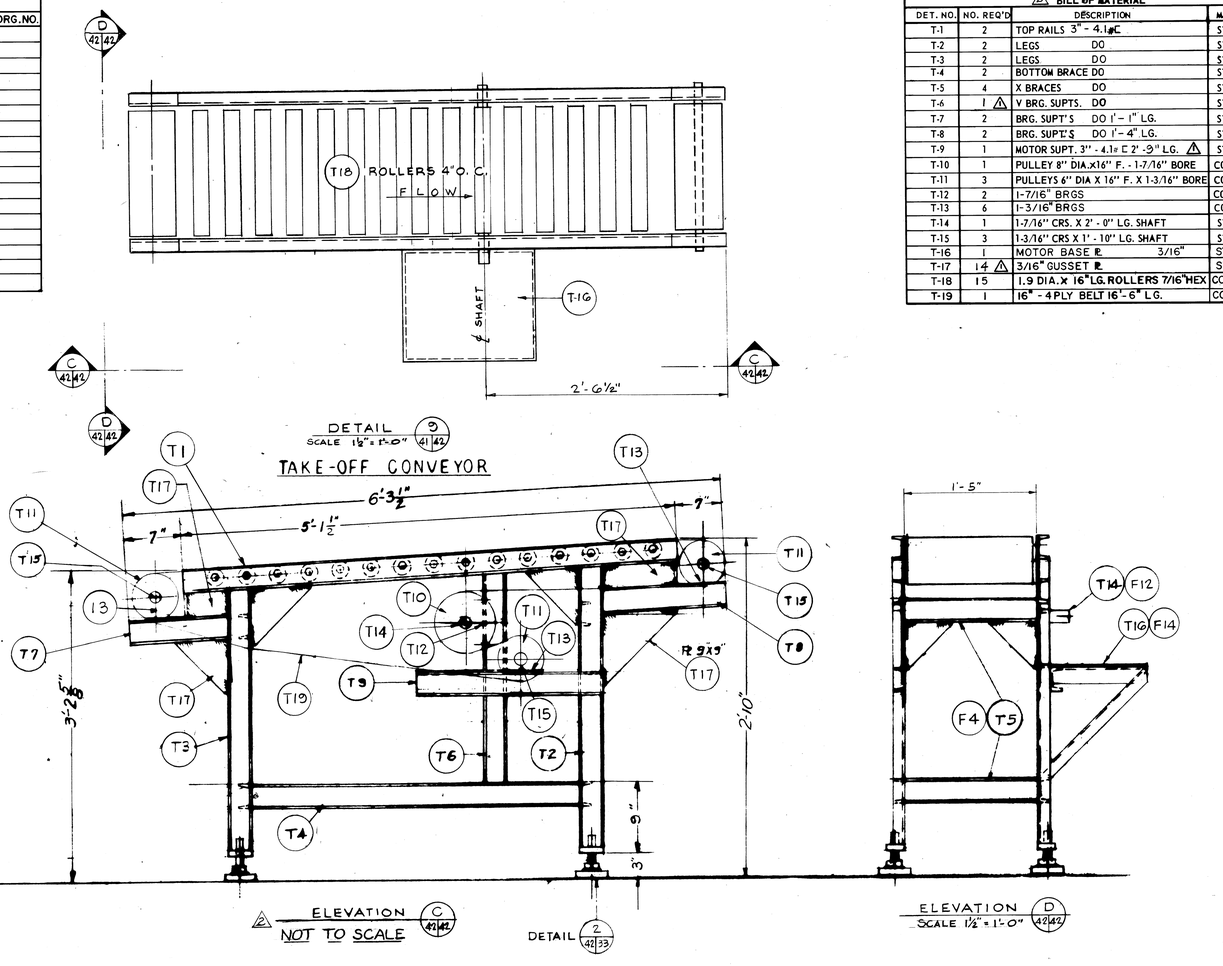

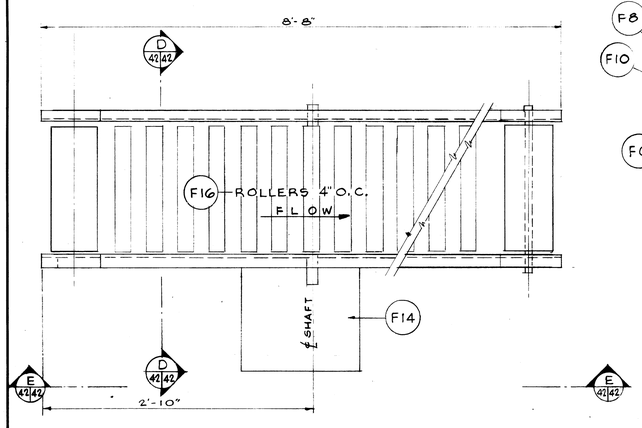

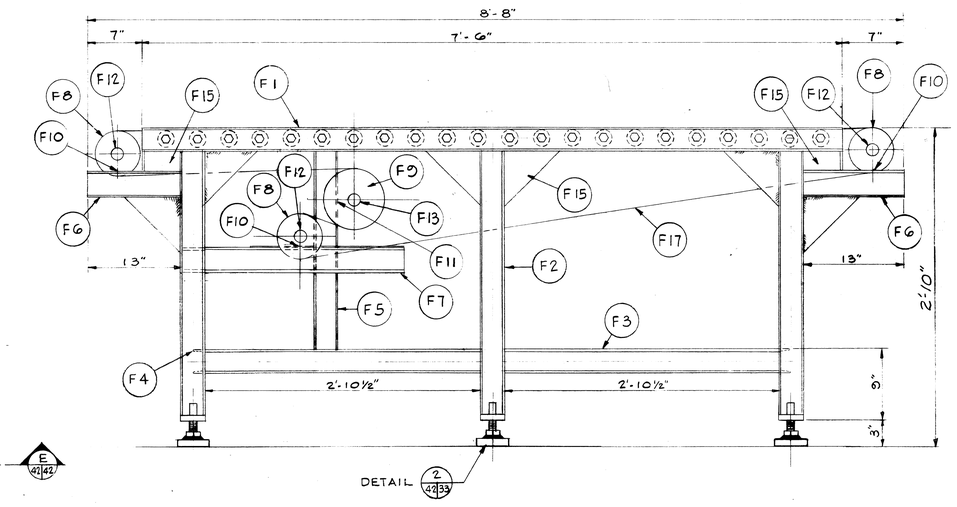

△2 BILL OF MATERIALS

DET. NO.	NO. REQ'D	DESCRIPTION	MAT'L	DRG. NO.
L-1	2	TOP RAILS 3"-4.1 #E	STEEL	
L-2	4	LEGS DO	STEEL	
L-3	2	BOT. RAILS DO	STEEL	
L-4	4	X BRACES DO	STEEL	
L-5	2	BRG. SUP'S. DO 1'-2" LG.	STEEL	
L-6	2	BRG. SUP'S. DO 1'-0" LG.	STEEL	
L-7	1	3/16" ℞ SPIRAL GEAR UNIT BASE	STEEL	
L-8	2	6" DIA 16" FACE 1-7/16" BORE	COMM'L	
L-9	2	1-7/16" C.R.S.	COMM'L	
L-10	4	1-7/16" BRGS.	COMM'L	
L-11	13	1.9" DIA. X 16" LG. ROLLERS	COMM'L	
L-12	1	16" 4 PLY BELT 11'-6" LG.	COMM'L	
L-13	12	GUSSETS 3/16" ℞.	STEEL	

LOADING CONVEYOR

GRAPHIC SCALE

1½" = 1'-0"

ADAPTED FROM N.J.S.O.D. No. 1029M5-4

SYMBOL	DESCRIPTION	DATE	APPROVAL
△2	REV. ELEV. A, C, & E; REV 2 BILLS OF MAT'L.	22 AUG 1966	
△1	REVISED BILL OF MATERIAL	8/22/66	

REVISIONS

AMMANN & WHITNEY
CONSULTING ENGINEERS
111-8TH AVENUE, NEW YORK, N.Y.

DEPARTMENT OF THE ARMY
OFFICE OF THE CHIEF OF ENGINEERS
MILITARY CONSTRUCTION - ENGINEERING DIVISION
WASHINGTON, D.C.

DRAWN BY: G.C.
TRACED BY: G.C.
CHECKED BY: MSA
SUBMITTED BY: AMMANN & WHITNEY
APPROVED: CHIEF R & P.S. BRANCH

AMMUNITION MAINTENANCE FACILITY

AMMUNITION MAINTENANCE BUILDING

ABRASIVE BLAST MACHINE
FEED, LOADING & TAKE-OFF CONVEYORS

DATE: 18 JULY 1966

APPROVED: CHIEF ENGINEERING DIVISION, MIL. CONSTR. O.C.E.

APPROVED FOR

DATE:

SCALE AS NOTED

SPEC. NO. 16-06-324-66-CE

DRAWING NUMBER 35-69-09

SHEET 42 OF 45

TOLERANCE & DIMENSIONS EXCEPT AS NOTED
FROM FINISHED SURFACES
DECIMAL ±
FRACTIONAL ± 1/32
ANGULAR ±
FROM UNFINISHED SURFACES
FRACTIONAL ±
ANGULAR ±
SHARP CORNERS & EDGES BROKEN TO APPROX. ____ IN.