BILL OF MATERIAL				
DET. NO.	NO. REQ'D	DESCRIPTION	MAT'L	DRG. NO.
67	1	COVER PLATE, 18 GAGE 63-3/4" X 38-1/2"	STEEL	
68	1	SAFTEY FLANGE, 18 GAGE 23-1/2" X 29"	STEEL	
69	1	END PLATE, 18 GAGE 7" X 39-7/8"	STEEL	
70	1	END PLATE, 18 GAGE 7-1/2" X 21-21/32"	STEEL	
71	1	CLIP, 2" X 2" X 1/4" L, 1-3/4" LONG	STEEL	
72	1	SUPPORT BRACKET, 3/16" X 1-1/4" X 8-7/8" LONG BAR STOCK	STEEL	
73	1	SUPPORT BRACKET, 3/16" X 1-1/4" X 12" LONG BAR STOCK	STEEL	
74	1	SUPPORT BRACKET, 3/16" X 1-1/4" X 10-11/16" LONG BAR STOCK	STEEL	
75	1	SUPPORT CLIP, 1/2" X 1-1/4" X 6-1/2" LONG BAR STOCK	STEEL	
76	1	SUPPORT BRACKET, 3/16" X 1-1/4" X 8-5/8" LONG BAR STOCK	STEEL	
77	4	1/2" X 1" N.C. BOLTS W/HX. NUT	STEEL	
78	4	SPLICE CLIP, 1/8"X1"X3"LG.	STEEL	
79	8	1/4"Φ MACHINE SCREWS W/SQ. NUTS	STEEL	

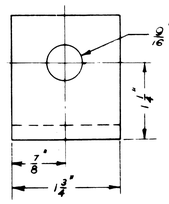

DETAIL 3 (38|38)
SCALE: 1"=1"
71 SUPPORT CLIP
2"x2"x1/4" ANGLE

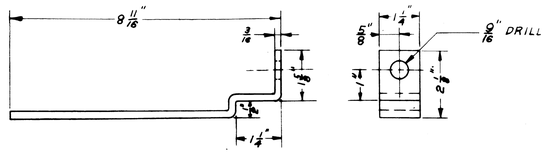

DETAIL 4 (38|38)
SCALE: 1/2"=1"
73 SUPPORT BRACKET

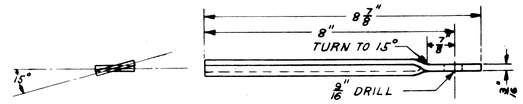

DETAIL 5 (38|38)
SCALE: 1/2"=1"
72 SUPPORT BRACKET
1 1/4" X 3/16" BAR STOCK

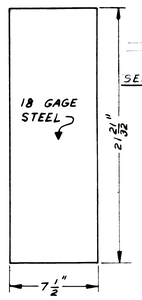

DETAIL 2 (38|38)
SCALE: 3/16"=1"
70 END PLATE
FORM TO 7 7/8" R. & WELD ON.

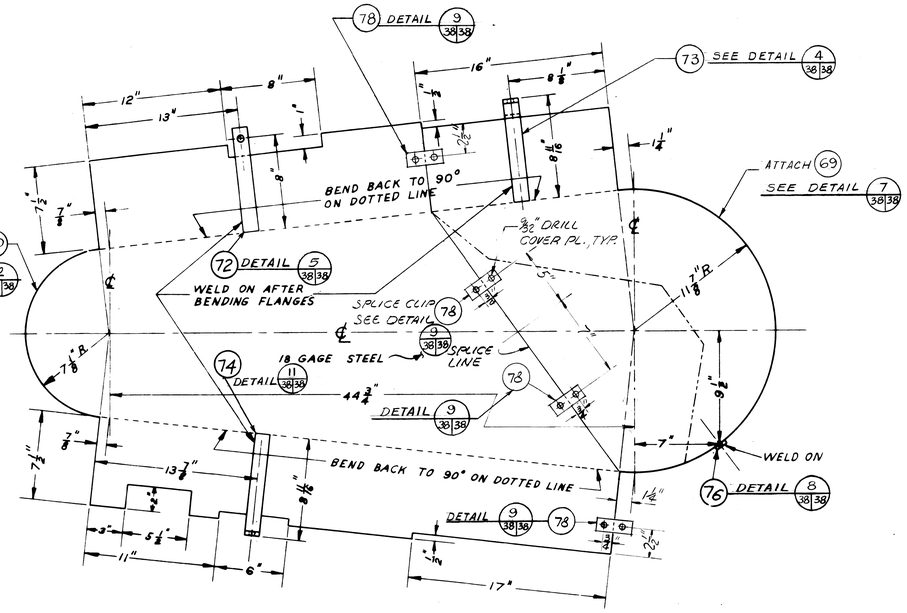

DETAIL 1 (38|38)
SCALE: 3/16"=1"
67 COVER PLATE (2 PARTS SPLICED)

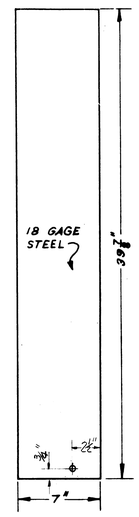

DETAIL 7 (38|38)
SCALE: 3/16"=1"
69 END PLATE
FORM TO 11 7/8" R. & WELD ON

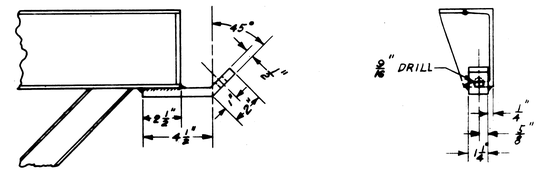

DETAIL 6 (38|38)
SCALE: 1/2"=1"
75 SUPPORT CLIP

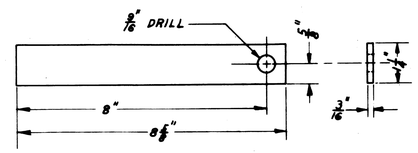

DETAIL 8 (38|38)
SCALE: 1/2"=1"
76 SUPPORT BRACKET

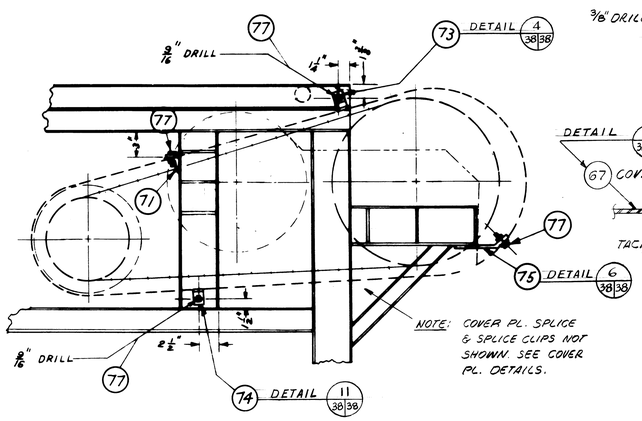

ASSEMBLY 1 (38|38)
SCALE: 1/8"=1"
COVER MOUNTING

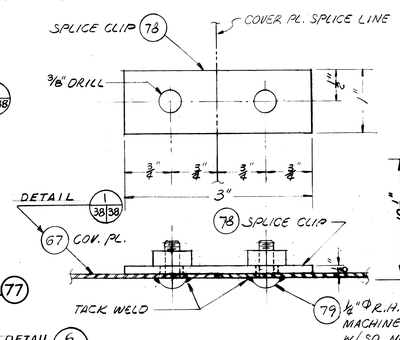

DETAIL 9 (38|38)
SCALE: 1"=1"
78 SPLICE CLIP

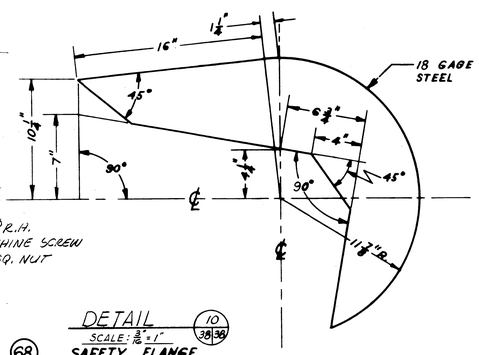

DETAIL 10 (38|38)
SCALE: 3/16"=1"
68 SAFETY FLANGE
WELD IN ON FAR SIDE AFTER END PLATE IS WELDED ON, AS SHOWN ABOVE (WITH ---- LINES)

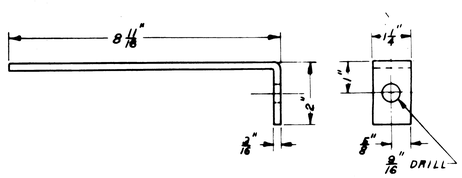

DETAIL 11 (38|38)
SCALE: 1/2"=1"
74 SUPPORT BRACKET

GRAPHIC SCALES

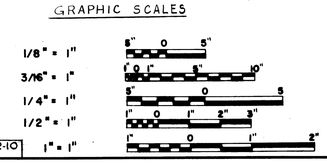

ADAPTED FROM U.F.S.O.D. No.1022-10

SYMBOL	DESCRIPTION	DATE	APPROVAL
	REVISIONS		

AMMANN & WHITNEY
CONSULTING ENGINEERS
111-8TH AVENUE, NEW YORK, N.Y.

DEPARTMENT OF THE ARMY
OFFICE OF THE CHIEF OF ENGINEERS
MILITARY CONSTRUCTION - ENGINEERING DIVISION
WASHINGTON, D.C.

DRAWN BY: G.H.
TRACED BY: C.P.D.
CHECKED BY: M.S.A.
SUBMITTED BY: AMMANN & WHITNEY
APPROVED: CHIEF M. & P.S. BRANCH
APPROVED: CHIEF ENGINEERING DIVISION, MIL. CONSTR. O.C.E.
APPROVED FOR
DATE:

AMMUNITION MAINTENANCE FACILITY
AMMUNITION MAINTENANCE BUILDING
POWER CONVEYOR
POWER DRIVE CHAIN COVER

DATE: 18 JULY 1966
SCALE AS NOTED
SPEC. NO. 16-06-324-66-CE
DRAWING NUMBER 35-69-09
SHEET 38 OF 45

TOLERANCE & DIMENSIONS EXCEPT AS NOTED
FROM FINISHED SURFACES
DECIMAL ±
FRACTIONAL ± 1/64"
ANGULAR ±
FROM UNFINISHED SURFACES
FRACTIONAL ± 1/32"
ANGULAR ± 30'
SHARP CORNERS & EDGES BROKEN TO APPROX. 1/32 IN.