NOTE
ALL MATERIAL FOR MOTOR BASE: 3 C 4.1

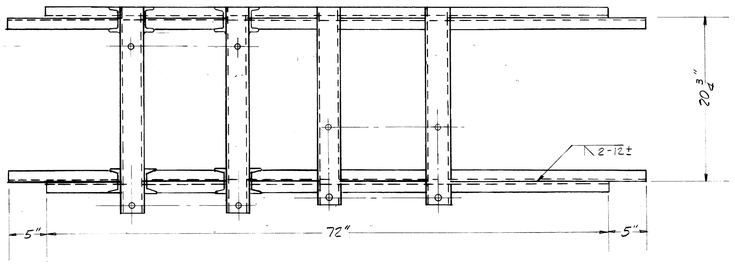

1 PLAN (B 36/36)

MOTOR BASE

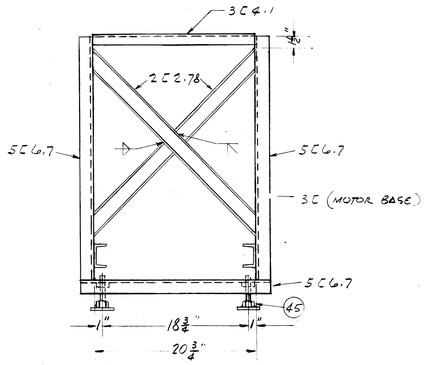

2 1 ELEVATION (C 36/36)
SCALE: 1/8" = 1"

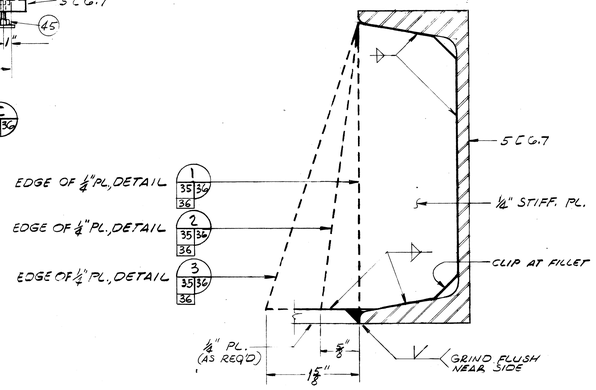

DETAILS (1 35/36 36, 2 35/36 36, 3 35/36 36)
SCALE: 1" = 1"

BILL OF MATERIAL				
DET. NO.	NO. REQ'D	DESCRIPTION	MAT'L	DRG. NO.
21	1	18" IDLER PULLEY SEE SHT.# 34	STEEL	
22	1	24" DRIVE PULLEY SEE SHT.# 34	STEEL	
26	2	DRIVE PULLEY BEARINGS (PILLOW BLOCK BEARINGS)	COMM'L	
27	2	IDLER PULLEY BEARINGS (PILLOW BLOCK BEARINGS)	COMM'L	
30	4	7/8" X 3" N.C. BOLTS & NUTS	STEEL	
41	4	5/8" X 1-1/2" N.C. BOLTS & NUTS	STEEL	
45	4	ADJUSTABLE LEGS	STEEL	
52	1	RAIL END SECTION, 3" [4.1#	STR. STEEL	
53	1	BASE FOR MOTOR & GEAR CASE, 3", 4.1# [CONSTRUCTION	STR. STEEL	
54	1	DRIVE PULLEY SUPPORT, [	STR. STEEL	
55	1	SUPPORT LEGS, [	STR. STEEL	
56	1	IDLER PULLEY SUPPORT 5", 6.7# [22-1/2" LONG	STR. STEEL	
57	1	SPROCKET, TYPE "B", 19 TEETH, 2-1/2" DIA. BORE, WITH KEYWAY FOR 5/8" SQ. KEY, FOR 1-1/2" PITCH ROLLER CHAIN	STEEL	
58	1	SPROCKET, TYPE "B", 42 TEETH, 2-7/8" DIA. BORE, WITH KEYWAY FOR 3/4" SQ. KEY, FOR 1-1/2" PITCH ROLLER CHAIN	STEEL	
59	1	STEEL ROLLER CHAIN, 1-1/2" PITCH, 88 LINKS INCL. 1 CONNECTOR LINK, R.C. 120	STEEL	
60	1	VARIABLE DRIVE MOTOR W/ SYNCHRONOUS GEAR.	COMM'L	
61	1	SPEED REDUCER W/ WORM GEAR	COMM'L	
62	1	FLEXIBLE CHAIN COUPLING	COMM'L	

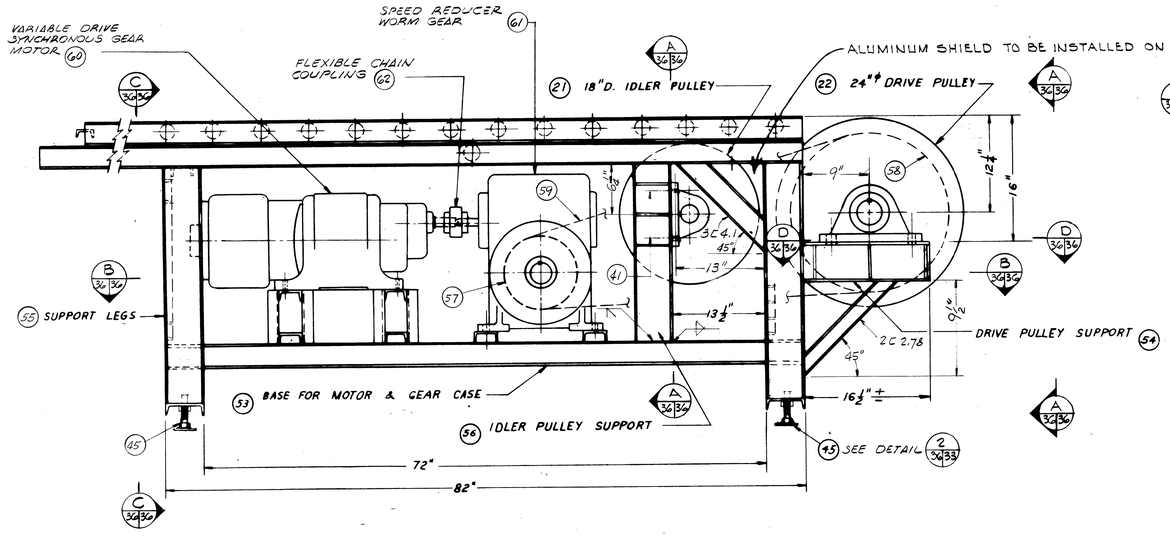

2 1 DETAIL (4 37/36 40)
SCALE: 1/8" = 1"
POWER DRIVE-END UNIT

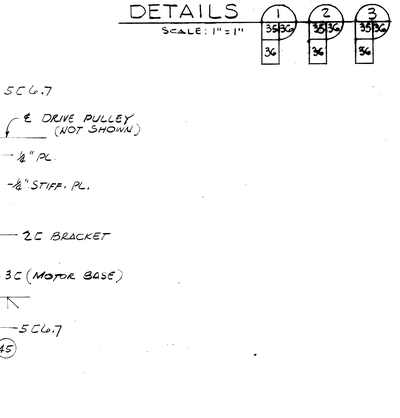

2 1 ELEVATION (A 36/36)
SCALE: 1/8" = 1"

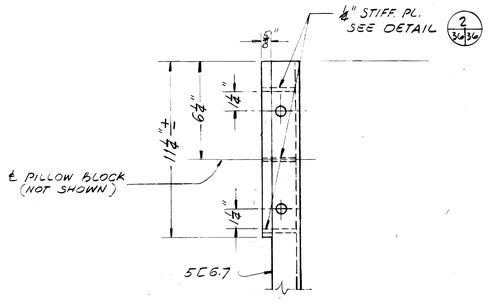

1 SECTION (A 36/36)
SCALE: 1/2" = 1"

IDLER PULLEY SUPPORT

ELEVATION

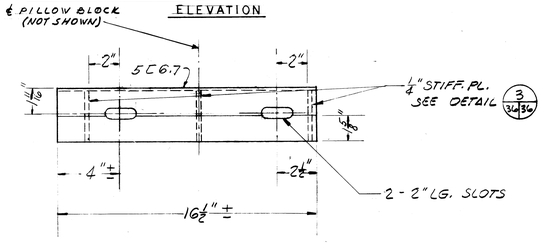

PLAN (D 36/36)
SCALE: 1/2" = 1"

DRIVE PULLEY SUPPORT

NOTES:
1.- WELDED CONSTRUCTION TYPICAL WELDS SHOWN
2.- DETAILS SHOWN FOR MOUNTING DRIVE EQUIPMENT TO BE MODIFIED AS REQUIRED BY ACTUAL EQUIPMENT USED.

GRAPHIC SCALES

ADAPTED FROM W.F.B.O.D. No. 1022-6

TOLERANCE & DIMENSIONS EXCEPT AS NOTED
FROM FINISHED SURFACES
DECIMAL ± .002
FRACTIONAL ± 1/64
ANGULAR ± .50
FROM UNFINISHED SURFACES
FRACTIONAL ± 1/8
ANGULAR ± 1°
SHARP CORNERS & EDGES BROKEN TO APPROX. 1/8 IN.

SYMBOL	DESCRIPTION	DATE	APPROVAL
2	REV. ELEV. C-36-36, A-36-36, & DET 4-37-36	22 AUG 69	
1	REVISED SECTION & DETAIL NOTATIONS	8/22/66	

REVISIONS

AMMANN & WHITNEY
CONSULTING ENGINEERS
111-8TH AVENUE, NEW YORK, N.Y.

DEPARTMENT OF THE ARMY
OFFICE OF THE CHIEF OF ENGINEERS
MILITARY CONSTRUCTION - ENGINEERING DIVISION
WASHINGTON, D.C.

DRAWN BY: G.C.
TRACED BY: G.C.
CHECKED BY: W.S.A.
SUBMITTED BY: AMMANN & WHITNEY
APPROVED: CHIEF M. & P.S. BRANCH
APPROVED: CHIEF ENGINEERING DIVISION, MIL. CONSTR. O.C.E.
DATE: 18 JULY 1966
APPROVED FOR
DATE:

AMMUNITION MAINTENANCE FACILITY
AMMUNITION MAINTENANCE BUILDING
POWER CONVEYOR
POWER DRIVE - END UNIT

SCALE 1/2" = 1'-0"
SPEC. NO. 16-06-324-66-CE
DRAWING NUMBER 35-69-09
SHEET 36 OF 45