CORPS OF ENGINEERS

U.S. ARMY

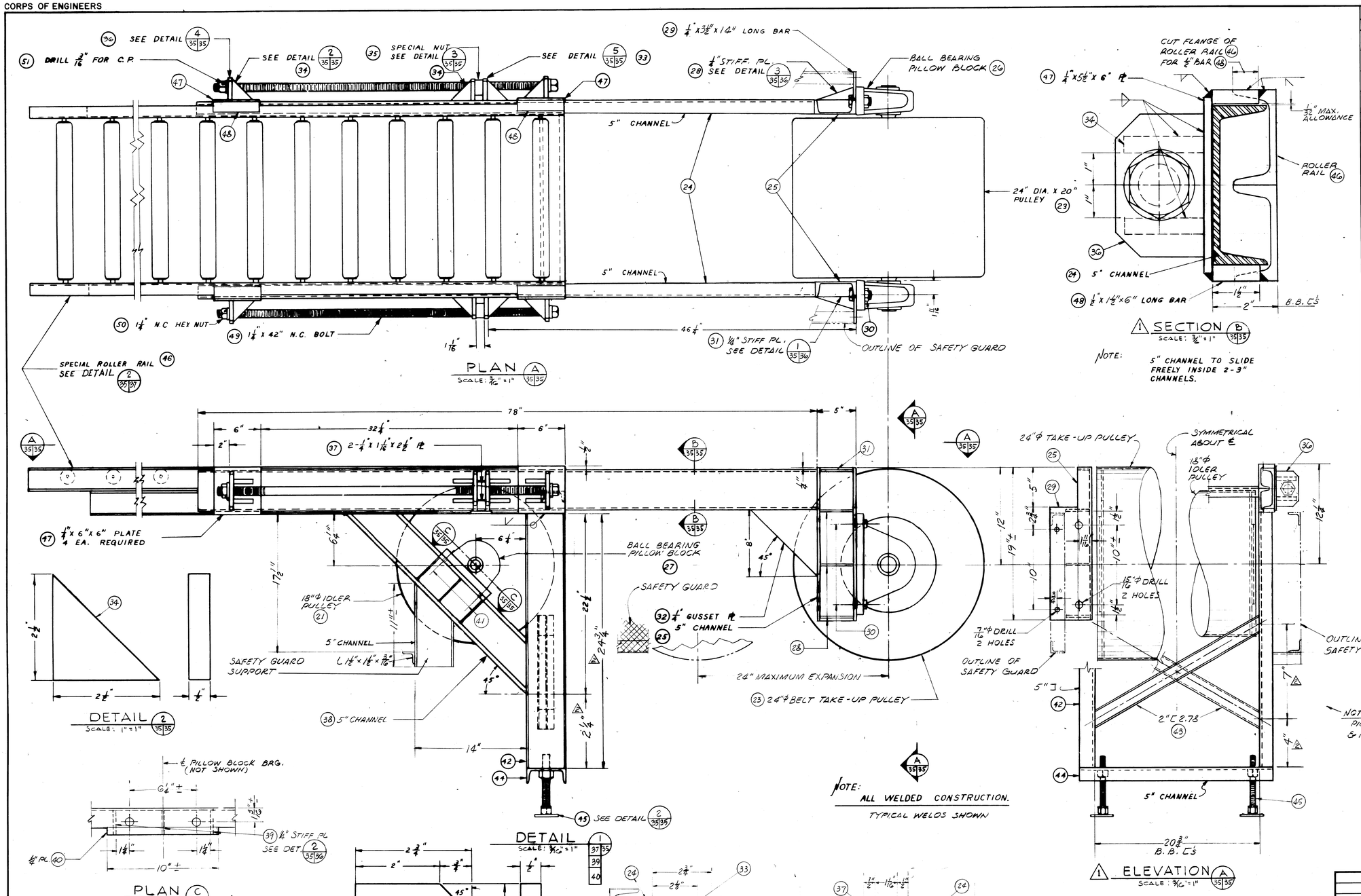

BILL OF MATERIAL

DET. NO.	NO. REQ'D	DESCRIPTION	MAT'L	DRG. NO.
21	1	18" IDLER PULLEY, SEE SHT #34 FOR DETAILS	STEEL	
23	1	24" TAKE-UP PULLEY, SEE SHT #34 FOR DETAILS	STEEL	
24	2	BELT TAKE-UP ADJUSTMENT 5" [, 78" LONG, 6.7#	STR. STEEL	
25	2	PULLEY SUPPORT 5" [, 18-1/2" LONG, 6.7#	STR. STEEL	
26	2	TAKE-UP PULLEY BEARINGS (PILLOW BLOCK BEARINGS)	COMM'L	
27	2	IDLER PULLEY BEARINGS (PILLOW BLOCK BEARINGS)	COMM'L	
28	6	GUSSET PLATES, 1/4" PL	STEEL	
△ 29	2	BEARING SEAT, 1/4" X 3 1/2" X 14" BAR STOCK	STEEL	
30	4	7/8" X 3" BOLTS WITH N.C. NUTS FOR BEARINGS	STEEL	
31	2	FILLER PLATE, 1/4" PL	STEEL	
32	2	GUSSET PLATE, 1/4" PL	STEEL	
33	4	TAKE-UP ADJUSTMENT ASSEMBLY, 1/2" X 2-3/4" X 4" PL	STEEL	
34	16	TAKE-UP ADJUSTMENT ASSEMBLY, 1/2" X 2-1/2" SQ. PL	STEEL	
35	2	SPECIAL 1-1/4" X 1/2" X 2-1/4" SQ. N. C. NUT.	STEEL	
36	4	TAKE-UP ADJUSTMENT ASSEMBLY, 1/2" X 2-3/4" X 4-1/2" PL	STEEL	
37	4	TAKE-UP ADJUSTMENT ASSEMBLY, 1/4" X 1-1/16" X 2-1/2" PL	STEEL	
38	2	PULLEY SUPPORT, 5" 6.7# [, 31-13/16" LONG	STR. STEEL	
39	6	GUSSET PLATES, 1/4" PL	STEEL	
40	2	BEARING SEAT 1/4" X 5/8" X 10" LONG BAR STOCK	STEEL	
41	4	5/8" X 1-1/2" N.C. BOLTS WITH NUTS FOR BEARINGS	STEEL	
42	2	SUPPORT, 5" 6.7# [	STR. STEEL	
43	2	BRACING, 2" [, 2.78#	STR. STEEL	
44	1	SUPPORT LEGS, 5" 6.7# [, 24-1/4" LONG	STR. STEEL	
45	2	ADJUSTABLE LEGS SEE SHT. #33	STEEL	
46	1	ROLLER RAIL-BELT TAKE-UP END UNIT 3" [, 4.1# SEE SHT. #37	STR. STEEL	
47	4	COVER PLATES, 1/4" X 6" SQ. PL	STEEL	
48	4	FILLER, 1/2" X 5/8" X 6" BAR STOCK	STEEL	
49	2	ADJUSTING SCREWS 1-1/4" X 42" N.C. BOLT	STEEL	
50	2	ADJ. SCREW NUTS, 1-1/4" N. C. HEX.	STEEL	
51	2	11/64" X 2" COTTER PIN	STEEL	

SYMBOL	DESCRIPTION	DATE	APPROVAL
△	REV. BILL OF MATL.; DET. 1-37-39; & ELEV. A-35-35	22 NOV 69	
△	REVISED DETAIL NO. 29 IN BILL OF MATERIAL	8/22/66	
	REVISED SECTION & DETAIL NOTATIONS		

REVISIONS

AMMANN & WHITNEY
CONSULTING ENGINEERS
111-8TH AVENUE, NEW YORK, N.Y.

DEPARTMENT OF THE ARMY
OFFICE OF THE CHIEF OF ENGINEERS
MILITARY CONSTRUCTION - ENGINEERING DIVISION
WASHINGTON, D.C.

DRAWN BY: G.C.
TRACED BY: G.C.
CHECKED BY: M.S.A.
SUBMITTED BY: AMMANN & WHITNEY
APPROVED: CHIEF M. & P.S. BRANCH
APPROVED: CHIEF ENGINEERING DIVISION, MIL. CONSTR. O.C.E.
APPROVED FOR
DATE: 15 JULY 1966
SCALE AS NOTED
SPEC. NO. 16-06-324-66-OE

AMMUNITION MAINTENANCE FACILITY

AMMUNITION MAINTENANCE BUILDING

POWER CONVEYOR BELT TAKE-UP-END UNIT

DRAWING NUMBER 35-69-09

SHEET 35 OF 45

TOLERANCE & DIMENSIONS EXCEPT AS NOTED
FROM FINISHED SURFACES
DECIMAL ±
FRACTIONAL ± 1/64
ANGULAR ±
FROM UNFINISHED SURFACES
FRACTIONAL ± 1/8
ANGULAR ± 1°
SHARP CORNERS & EDGES BROKEN TO APPROX. 1/64 IN.

ADAPTED FROM N.F.S.O.D. No. 1022-5

C.B. CO., INC 66-106