BILL OF MATERIAL				
DET. NO.	NO. REQ'D	DESCRIPTION	MAT'L	DRG. NO.
21	2	IDLER PULLEY , 18" O.D. X 20" FACE WIDTH. WELDED STEEL FAB. 2"ϕ STEEL SHAFT 30" LONG	STEEL	
22	1	DRIVE PULLEY, 24" O.D. X 20" FACE WIDTH. WELDED STEEL FAB. 3"ϕ STEEL SHAFT 30" LONG	STEEL	
23	1	BELT TAKE-UP PULLEY, SAME AS ITEM 22 EXCEPT SHAFT. SHAFT 3"ϕ X 28-1/2" LONG.	STEEL	

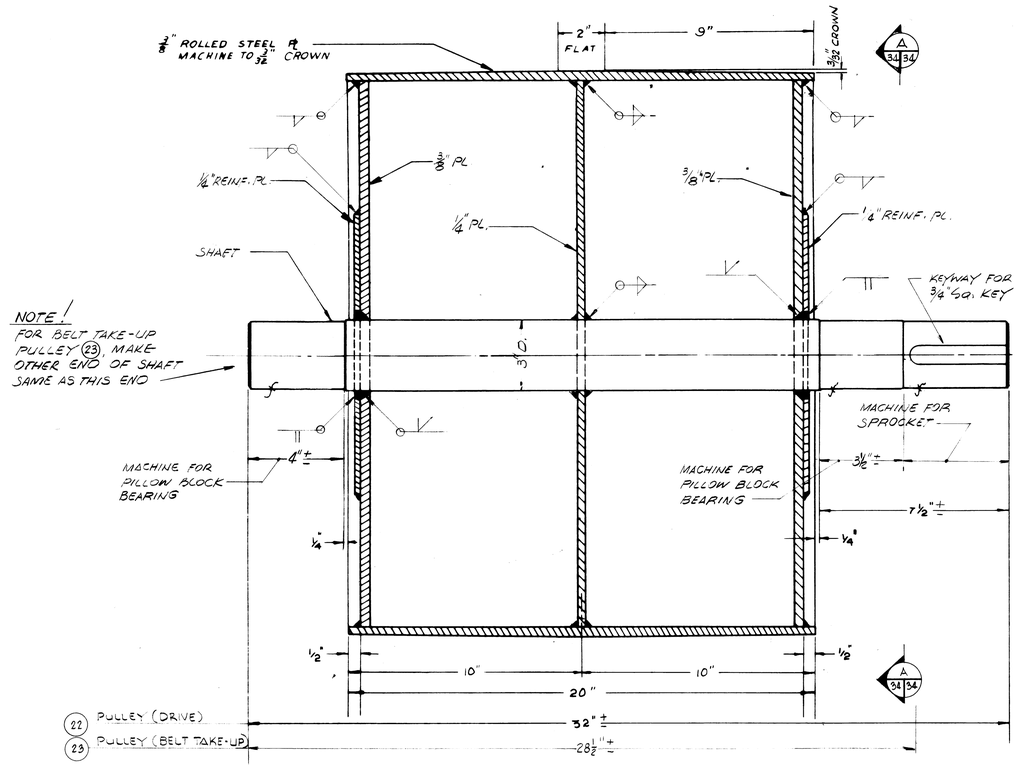

DETAIL (1 / 34 34)
SCALE: 3/8" = 1"

(22) PULLEY - POWER END UNIT (SHOWN).

(23) PULLEY - BELT TAKE-UP END UNIT (SIMILAR EXCEPT FOR SHAFT, SEE NOTE ABOVE).

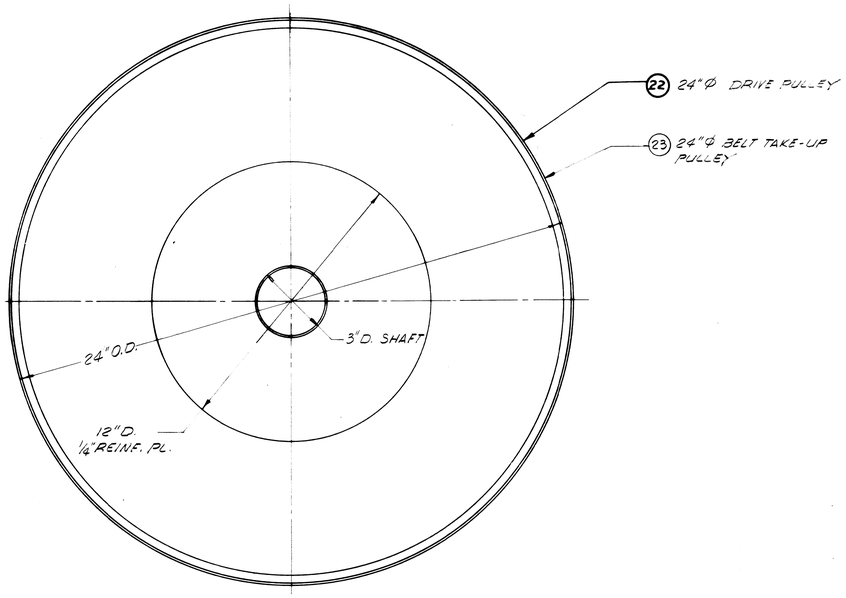

ELEVATION (A / 34 34)
SCALE: 3/8" = 1"

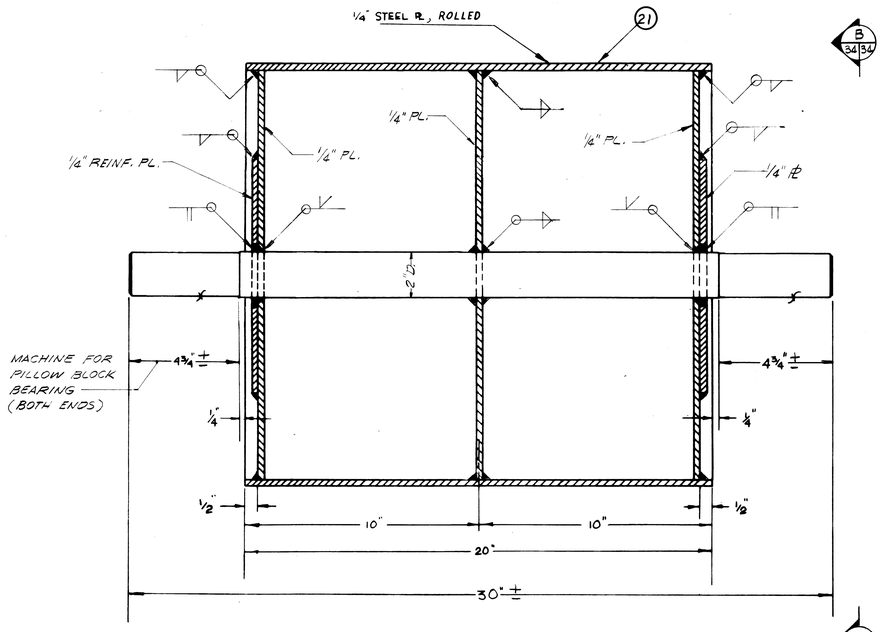

DETAIL (2 / 34 34)
SCALE: 3/8" = 1"

(21) PULLEY (IDLER)

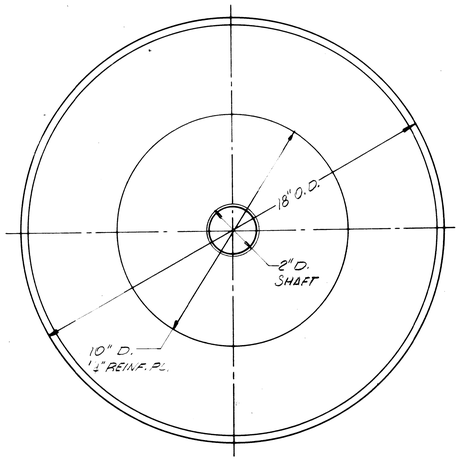

ELEVATION (B / 34 34)
SCALE: 3/8" = 1"

GRAPHIC SCALE

3/8" = 1"

1" 0 1" 2" 3" 4" 5"

ADAPTED FROM N.F.S.O.D. NO. 1022-4

TOLERANCE & DIMENSIONS EXCEPT AS NOTED

FROM FINISHED SURFACES
DECIMAL ± .002
FRACTIONAL ± 1/64"
ANGULAR ± 30'

FROM UNFINISHED SURFACES
FRACTIONAL ± 1/32"
ANGULAR ± 30'

SHARP CORNERS & EDGES BROKEN TO APPROX. 1/32 IN.

SYMBOL	DESCRIPTION	DATE	APPROVAL

REVISIONS

AMMANN & WHITNEY
CONSULTING ENGINEERS
111-8TH AVENUE, NEW YORK, N.Y.

DEPARTMENT OF THE ARMY
OFFICE OF THE CHIEF OF ENGINEERS
MILITARY CONSTRUCTION - ENGINEERING DIVISION
WASHINGTON, D.C.

DRAWN BY: G.C.
TRACED BY: G.C.
CHECKED BY: M.S.A.
SUBMITTED BY AMMANN & WHITNEY
APPROVED:
CHIEF M. & P.S. BRANCH

AMMUNITION MAINTENANCE FACILITY

AMMUNITION MAINTENANCE BUILDING

POWER CONVEYOR PULLEYS

APPROVED: DATE: 18 JULY 1966
CHIEF ENGINEERING DIVISION, MIL. CONSTR. O.C.E.

APPROVED FOR

DATE:

SCALE 3/8" = 1"

SPEC. NO. 16-06-324-66-CE

DRAWING NUMBER 35-69-09

SHEET 34 OF 45