BILL OF MATERIAL				
DET. NO.	NO. REQ'D	DESCRIPTION	MAT'L	DRG. NO.
4	2	GUARD RAIL 6-1/8" X 1/8" X 132" LONG	ALUM. #52S-H34	
5	10	STIFFENING FINS, 1/8" ℄	ALUM. #52S-H34	
6	4	CONNECTING CLIP, 1/8" ℄	ALUM. #52S-H34	
7	8	1/4" X 1-1/4" N.C. BOLT	STEEL	
8	8	1/4" N.C. HEX NUT	STEEL	
9	8	3/8" I.D. 1-1/4" SQ. X 1/8" SPECIAL WASHER	ALUM. #52S-H34	
10	8	3/8" I.D. 1-1/4" O.D. X 1/2" SPACING WASHERS	STEEL	
11	12	NO. 10 F.H. MACH. SCREWS	STEEL	
88	8	3/8" I.D. BEVELED WASHER	COMM'L.	

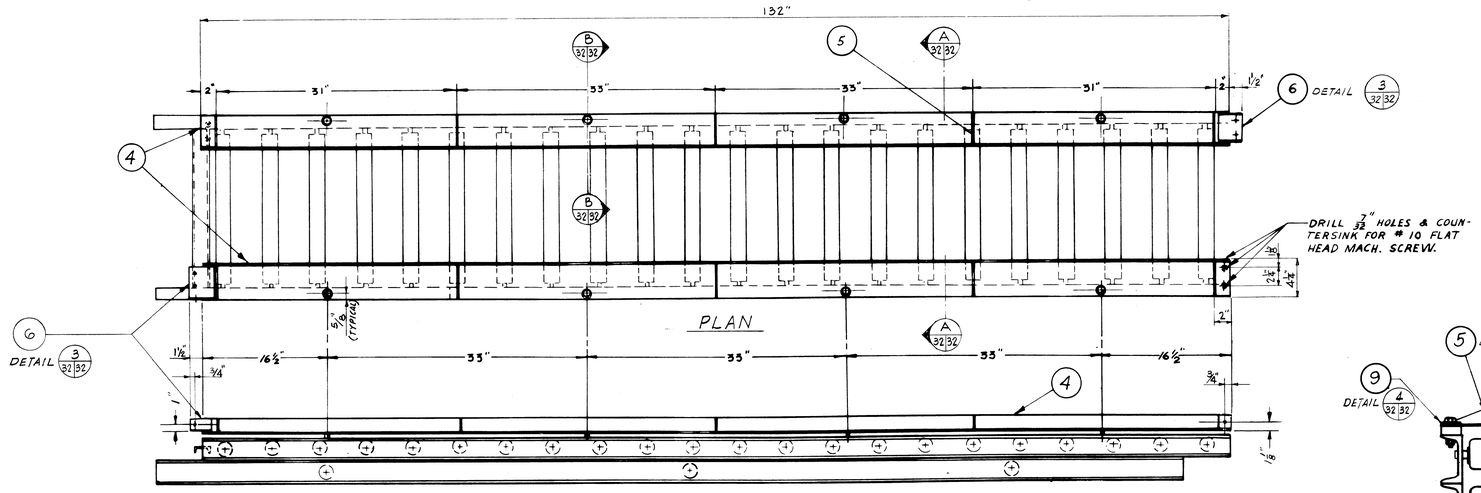

ELEVATION

DETAIL 1/32 32 / 37
SCALE: 1/8" = 1"
GUARD RAIL

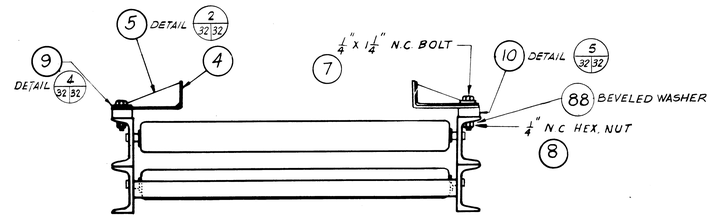

SECTION A 32 32
SCALE 1/4" = 1"

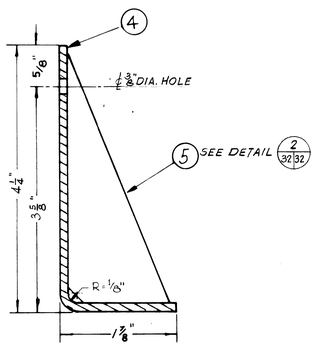

SECTION B 32 32
SCALE 1" = 1"

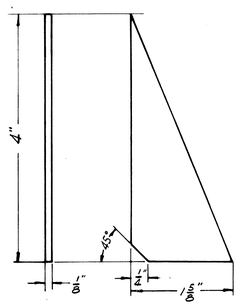

DETAIL 2 32 32
SCALE 1" = 1"
5 STIFFENING FIN

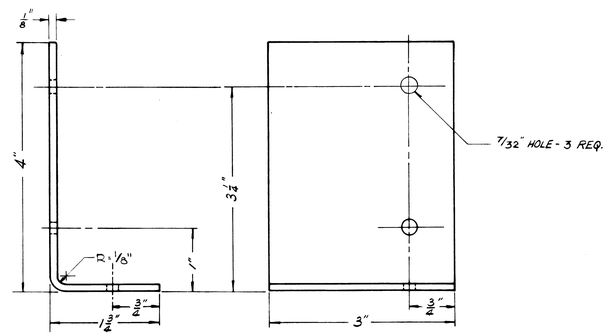

DETAIL 3 32 32
SCALE 1" = 1"
6 CONNECTING CLIP

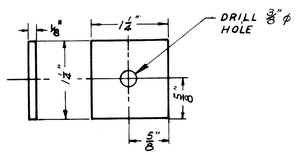

DETAIL 4 32 32
SCALE 1" = 1"
9 WASHER

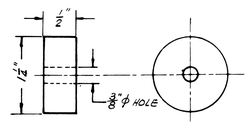

DETAIL 5 32 32
SCALE 1" = 1"
10 SPACER

GRAPHIC SCALES

1/4" = 1" 5" 0 5"

1/8" = 1" 5" 0 5"

1" = 1" 1" 0 1" 2"

ADAPTED FROM N.F.S.O.D. No. 1022-2

TOLERANCE & DIMENSIONS EXCEPT AS NOTED
FROM FINISHED SURFACES
DECIMAL ± .002"
FRACTIONAL ± 1/64"
ANGULAR ± 30'
FROM UNFINISHED SURFACES
FRACTIONAL ± 1/32"
ANGULAR ± 30'
SHARP CORNERS & EDGES BROKEN TO APPROX. 1/32 RL

SYMBOL	DESCRIPTION	DATE	APPROVAL

REVISIONS

AMMANN & WHITNEY
CONSULTING ENGINEERS
111-8TH AVENUE, NEW YORK, N.Y.

DEPARTMENT OF THE ARMY
OFFICE OF THE CHIEF OF ENGINEERS
MILITARY CONSTRUCTION - ENGINEERING DIVISION
WASHINGTON, D.C.

DRAWN BY: G.C.
TRACED BY: G.C.
CHECKED BY: M.S.A.
SUBMITTED: BY AMMANN & WHITNEY
APPROVED: CHIEF M. & P.S. BRANCH
APPROVED FOR
DATE:

AMMUNITION MAINTENANCE FACILITY

AMMUNITION MAINTENANCE BUILDING

POWER CONVEYOR GUARD RAIL

APPROVED: CHIEF ENGINEERING DIVISION, MIL. CONSTR. O.C.E.
DATE: 18 JULY 1966

SCALE AS NOTED
SPEC. NO. 16-06-324-66-CE

DRAWING NUMBER
35-69-09

SHEET 32 OF 45