| BILL OF MATERIAL | | | | |
|---|---|---|---|---|
| DET. NO. | NO. REQ'D | DESCRIPTION | MAT'L | DRG. NO. |
| 1 | 4 | SIDE RAILS 4.1#(ROLLER RAILS) 3" X 1-3/8" CHANNEL, 132" LONG | STR. STEEL | |
| 2 | 8 | SIDE RAIL SPACERS 2.78# 2" X 1" CHANNEL, 20-3/4" LONG | STR. STEEL | |
| 3 | 25 | 1.9" DIAMETER CONVEYOR ROLLERS WITH SEALED HARD BALL BEARINGS & 7/16" HEX. BAR AXLE. | COMM'L | |

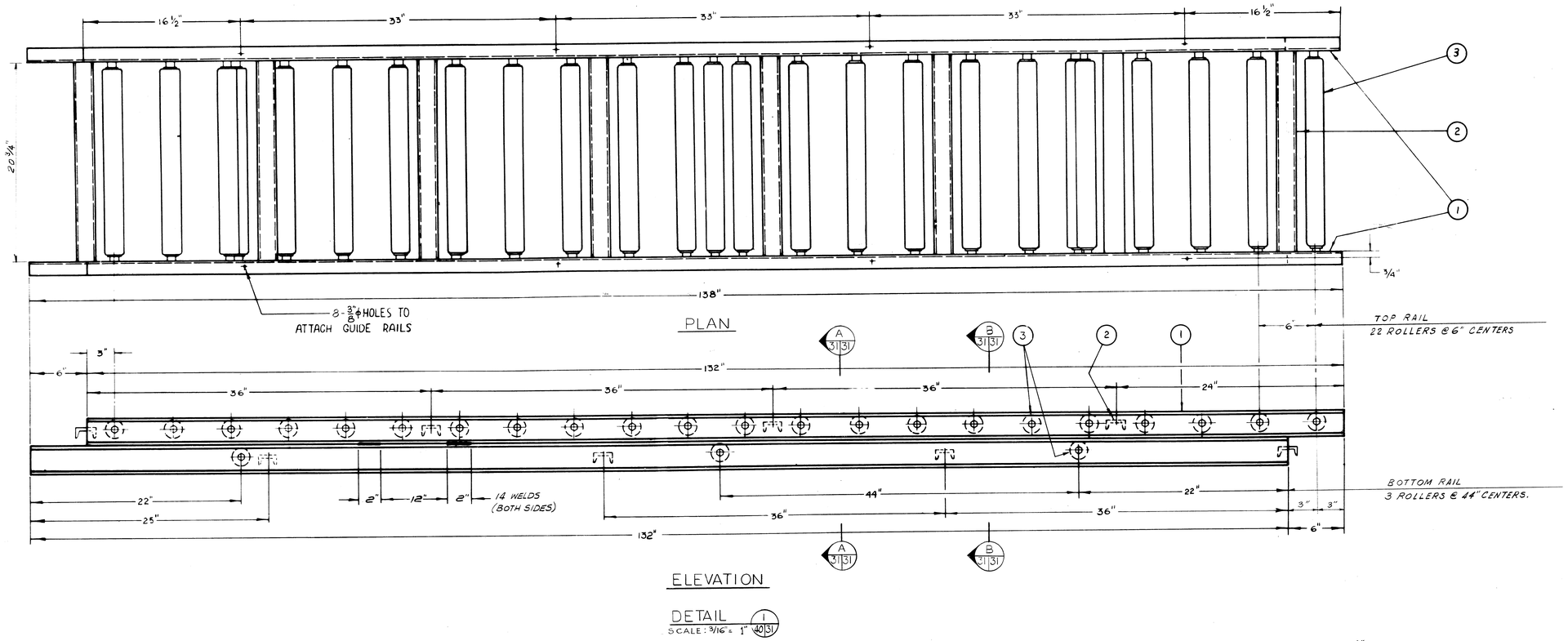


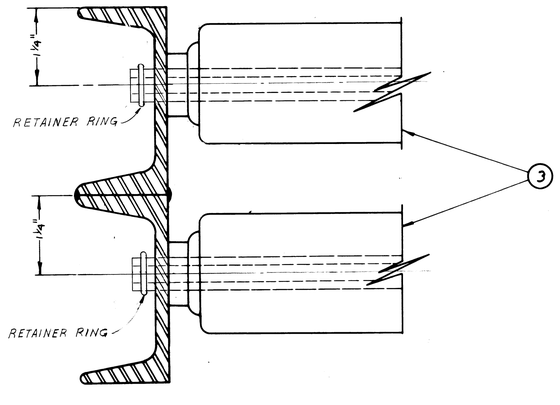


SECTION A / 31 31
SCALE: 1" = 1"

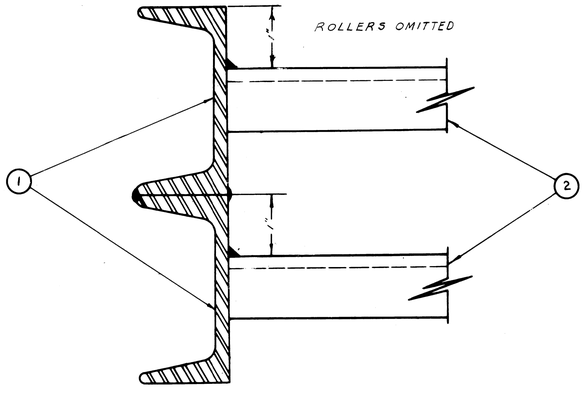


SECTION B / 31 31
SCALE: 1" = 1"

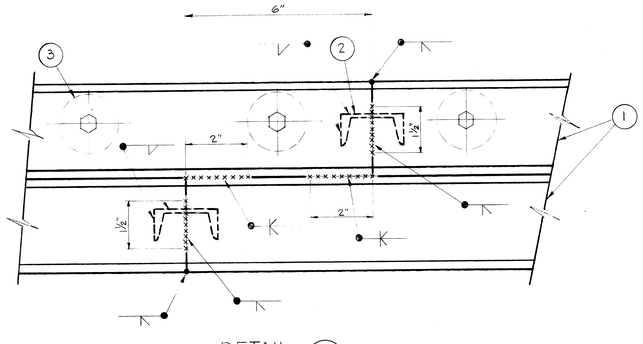


DETAIL 2 / 40 31
SCALE: 1/2" = 1"
ROLLER RAIL SPLICE

GRAPHIC SCALES

3/16" = 1"

1/2" = 1"

1" = 1"

ADAPTED FROM N.F.S.O.D. No 1022-1

TOLERANCE & DIMENSIONS EXCEPT AS NOTED

FROM FINISHED SURFACES
DECIMAL ± .002"
FRACTIONAL ± 1/64"
ANGULAR ± 1°

FROM UNFINISHED SURFACES
FRACTIONAL ± 1/32"
ANGULAR ± 1°

SHARP CORNERS & EDGES BROKEN TO APPROX. 1/32" RL

| SYMBOL | DESCRIPTION | DATE | APPROVAL |
|---|---|---|---|
| | REVISIONS | | |

AMMANN & WHITNEY
CONSULTING ENGINEERS
111-8TH AVENUE, NEW YORK, N.Y.

DEPARTMENT OF THE ARMY
OFFICE OF THE CHIEF OF ENGINEERS
MILITARY CONSTRUCTION - ENGINEERING DIVISION
WASHINGTON, D.C.

DRAWN BY: G.C.
TRACED BY: G.C.
CHECKED BY: M.S.A.
SUBMITTED BY AMMANN & WHITNEY
APPROVED CHIEF M. & P.S. BRANCH
APPROVED FOR
DATE:

AMMUNITION MAINTENANCE FACILITY

# AMMUNITION MAINTENANCE BUILDING

## POWER CONVEYOR ROLLER RAIL - INTERMEDIATE UNIT

APPROVED CHIEF ENGINEERING DIVISION, MIL. CONSTR. O.C.E.
DATE: 18 JULY 1966

SCALE AS NOTED
SPEC. NO. 16-06-324-66-CE

DRAWING NUMBER 35-69-09

SHEET 31 OF 45