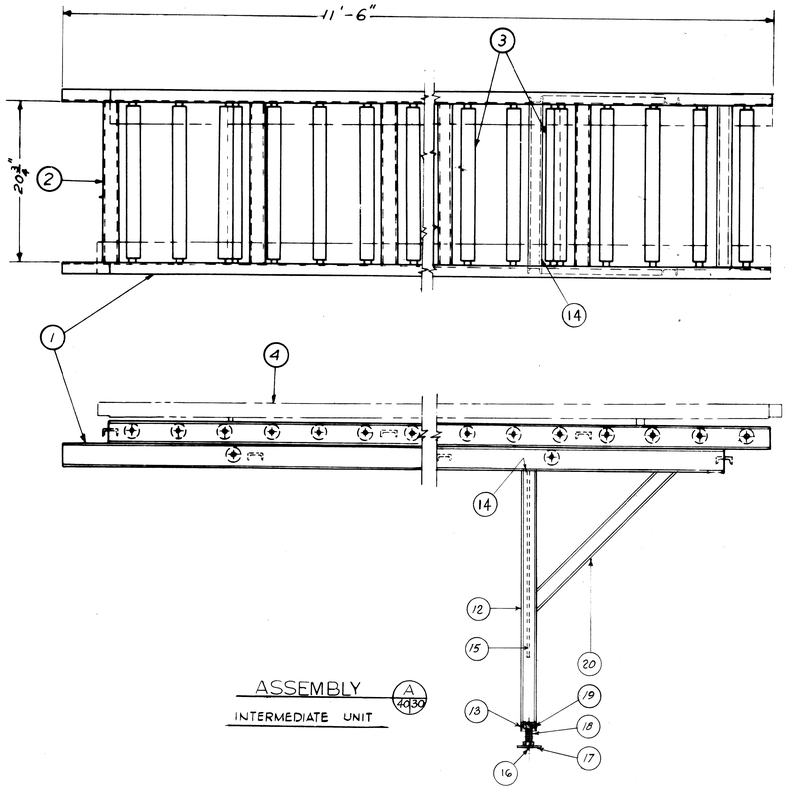

ASSEMBLY (A / 4030)

INTERMEDIATE UNIT

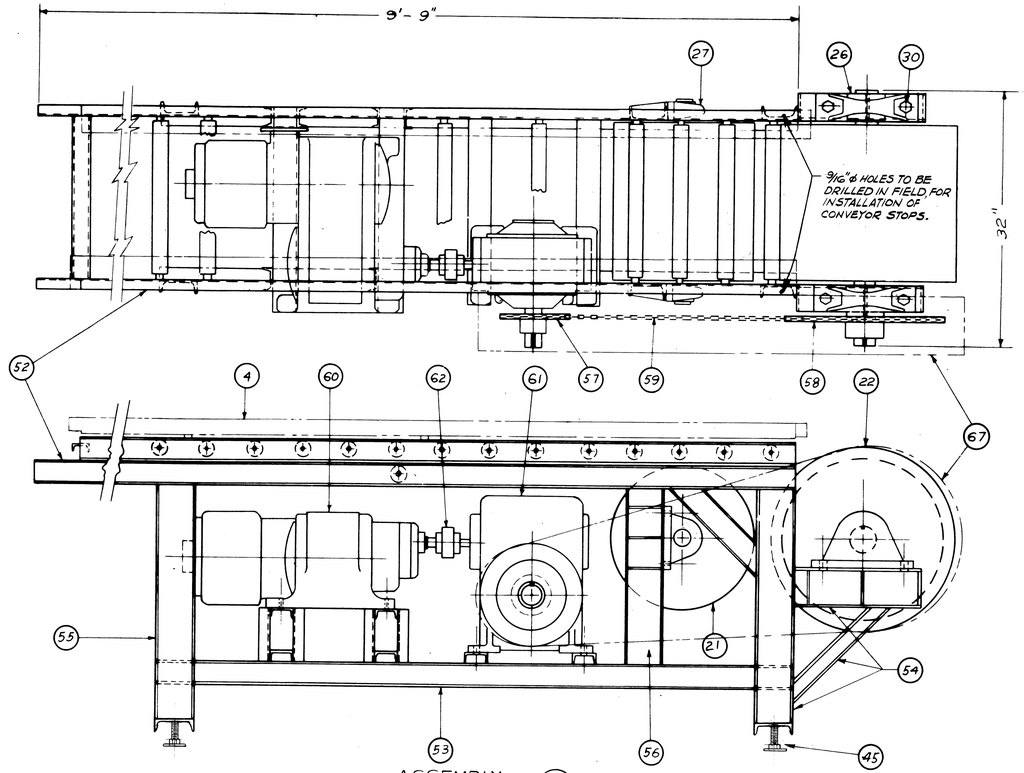

ASSEMBLY (B / 4030)

POWER DRIVE-END UNIT

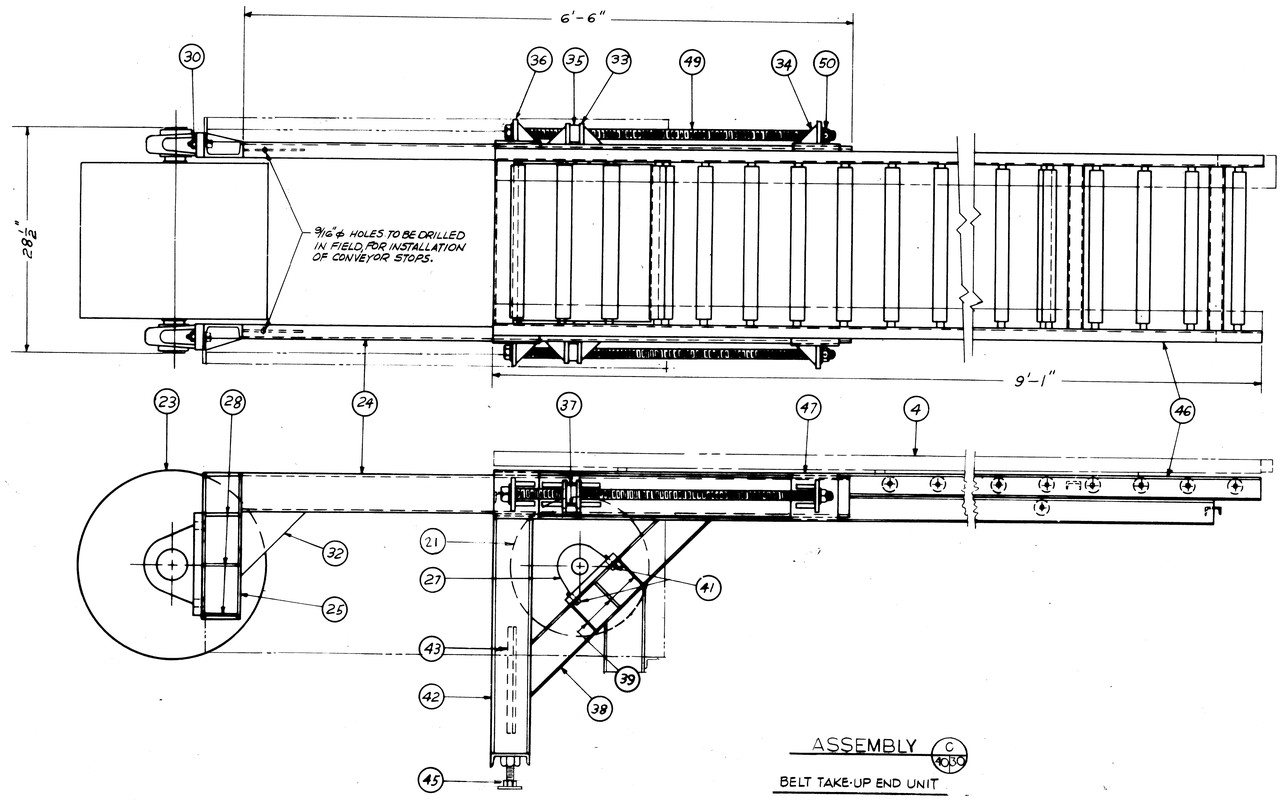

ASSEMBLY (C / 4030)

BELT TAKE-UP END UNIT

ADAPTED FROM N.F.S.O.D. NO. 1022

BILL OF MATERIAL

DET. NO.	NO. REQ'D	DESCRIPTION	MAT'L	DRG. NO.
1	4 PER SECTION	SIDE RAILS, 3" ⊏ @ 4.1#	STEEL	SH.#31
2	8 PER SECTION	SIDE RAIL SPACERS, 2" ⊏ 2.78#	STEEL	SH.#31
3	25 PER SECTION	CONVEYOR ROLLS, 1.9" DIA.	COMM'L	SH.#37
4	2 PER SECTION	GUARD RAIL	ALUM. #52S-H34	SH.#32
5	10 PER SECTION	STIFFENING FINS	ALUM. 52S-H34	SH.#32
6	2 PER SECTION	CONNECTING CLIP	ALUM. 52S-H34	SH.#32
7	8 PER SECTION	1/4" X 1-1/4" N. C. BOLT	STEEL	SH.#32
8	8 PER SECTION	1/4" N.C. HEX NUTS	STEEL	SH.#32
9	8 PER SECTION	SPECIAL SQ. WASHERS	ALUM. 52S-H34	SH.#32
10	8 PER SECTION	SPACING WASHERS	STEEL	SH.#32
11	12 PER SECTION	NO. 10 F.H. M.S.	STEEL	SH.#32
12	2 PER SUPPORT	SUPPORT LEGS, 2" X 1" ⊏ 2.78#	STEEL	SH.#33
13	1 PER SUPPORT	SUPPORT LEGS, 2" X 1" ⊏ 2.78#	STEEL	SH.#33
14	1 PER SUPPORT	SUPPORT LEGS, 2" X 1" ⊏ 2.78#	STEEL	SH.#33
15	2 PER SUPPORT	SUPPORT BRACING, 1-1/4" X 5/16" F.B.	STEEL	SH.#33
16	2 PER SUPPORT	ADJ. LEGS, 3/8" ϕ PIN, 5/8" LG	STEEL	SH.#33
17	2 PER SUPPORT	ADJ. LEGS, 1/4" ℞	STEEL	SH.#33
18	2 PER SUPPORT	ADJ. LEGS, 3/4" X 4" N.F. BOLT	STEEL	SH.#33
19	2 PER SUPPORT	ADJ. LEGS, 3/4" N.F. NUT	STEEL	SH.#33
20	2 PER SUPPORT	BRACING, 2" X 1" ⊏ 2.78#	STEEL	SH.#33
21	2	18" WELDED STEEL PULLEYS	STEEL	SH.#34
22	1	24" WELDED STEEL PULLEY	STEEL	SH.#34
23	1	24" WELDED STEEL PULLEY	STEEL	SH.#34
24	2	BELT TAKE-UP ADJ., 5" ⊏ @ 6.7#	STEEL	SH.#35
25	2	24" PULLEY SUP., 5" ⊏ @ 6.7#	STEEL	SH.#35
26	4	24" PULLEY BEARINGS	STEEL	SH.#35&36
27	4	18" PULLEY BEARINGS	STEEL	SH.#35&36
28	12	1/4" GUSSET PLATES	STEEL	SH.#35
29	2	BEARING SEAT, 1/4" X 1-5/8" F.B.	STEEL	SH.#35
30	8	7/8" X 3" N. C. BOLTS/W NUTS	STEEL	SH.35&36
31	2	1/4" FILLER PLATES	STEEL	SH.#35
32	2	1/4" GUSSET PLATES	STEEL	SH.#35
33	2	TAKE-UP ADJ. ASSY. 1/2" ℞	STEEL	SH.#35
34	16	TAKE-UP ADJ. ASSY. 1/2" ℞	STEEL	SH.#35
35	2	1-1/4" N.C. SPL. SQ. NUT	STEEL	SH.#35
36	2	TAKE-UP ADJ. ASSY. 1/2" ℞	STEEL	SH.#35
37	4	TAKE-UP ADJ. ASSY. 1/4" ℞	STEEL	SH.#35
38	2	18" PULLEY SUPPORT, 5" ⊏	STEEL	SH.#35
39	12	1/4" GUSSET PLATES	STEEL	SH.#35
40	4	BEARING SEAT, 1/4" X 5/8" F. B.	STEEL	SH.#35

BILL OF MATERIAL

DET. NO.	NO. REQ'D	DESCRIPTION	MAT'L	DRG. NO.
41	8	5/8" X 1-1/2" N . C. BOLTS/W NUTS	STEEL	SH.#35
42	2	TAKE-UP END SUPPORT, 5" ⊏	STEEL	SH.#35
43	2	SUPPORT BRACING, 2" X 1" ⊏ 2.78#	STEEL	SH.#35
44	1	TAKE-UP END SUP. LEGS, 5" ⊏	STEEL	SH.#35
45	6	ADJ. LEGS	STEEL	SH.#33
46	1	ROLLER RAIL-BELT TAKE-UP END UNIT	STEEL	SH.#37
47	4	1/4" COVER PLATES	STEEL	SH.#35
48	4	1/2" X 5/8" FILLER BAR.	STEEL	SH.#35
49	2	ADJ. SCREWS, 1-1/4" N.C.	STEEL	SH.#35
50	2	1-1/4" N.C. HEX NUTS	STEEL	SH.#35
51	2	11/64" X 2" COTTER PIN	STEEL	SH.#35
52	1	ROLLER RAIL- POWER END UNIT	STEEL	SH.#37
53	1	BASE FOR MOTOR & GEARS	STEEL	SH.#36
54	1	24" DRIVE PULLEY SUPPORT	STEEL	SH.#36
55	1	DRIVE END SUP. LEGS, 5" ⊏	STEEL	SH.#36
56	1	18" PULLEY SUP. 5" ⊏ @ 6.7#	STEEL	SH.#36
57	1	SPROCKET TYPE "B", 19 TEETH, 1-1/2" P. ROLLER. C.	STEEL	SH.#36
58	1	SPROCKET TYPE "B", 42 TEETH, 1-1/2" P. R. C.	STEEL	SH.#36
59	88 LINKS	ROLLER CHAIN, 1-1/2" PITCH	STEEL	SH.#36
60	1	VARIABLE DRIVE MOTOR WITH SYNCHRONOUS GEAR	COMM'L	SH.#36
61	1	SPEED REDUCER W/WORM GEAR	COMM'L	SH.#36
62	1	FLEXIBLE CHAIN COUPLING	COMM'L	SH.#36
63	8 PER OPENING	CLIPS, 1-1/4" X 5/16" F.B.	STEEL	SH.#39
64	4/OPEN.	1/2" X 4" N.C. BOLTS/W NUTS	STEEL	SH.#39
65	1	CONVEYOR BELT, RUBBER	COMM'L	
66	1	BELT FASTENER SET	COMM'L	SH.#39
67	1	CHAIN COVER ℞, 18 GAGE	STEEL	SH.#38
68	1	SAFETY FLANGE, 18 GAGE	STEEL	SH.#38
69	1	END ℞, 18 GAGE, 7" X 39-7/8"	STEEL	SH.#38
70	1	END ℞, 18 GAGE, 7-1/2" x 21-21/32"	STEEL	SH.#38
71	1	CLIP, 2" X 2" X 1/4" L, 1-3/4" LONG	STEEL	SH.#38
72	1	SUP. BRKT. 3/16" X 1-1/4" F.B. X 8-7/8"	STEEL	SH.#38
73	1	SUP. BRKT. 3/16" X 1-1/4" F.B. X 12"	STEEL	SH.#38
74	1	SUP. BRKT. 3/16" X 1-1/4" F.B. X 10-11/16"	STEEL	SH.#38
75	1	SUP. CLIP, 1/2" X 1-1/4" F.B. X 6-1/2"	STEEL	SH.#38
76	1	SUP. BRKT. 3/16" X 1-1/4" F.B. X 8-5/8"	STEEL	SH.#38
77	4	1/2" X 1" N.C. BOLTS/W HX. NUTS	STEEL	SH.#38
78	4	SPLICE CLIP, 1/8" x 1" x 3" LG.	STEEL	SH.#38
79	8	1/4" ϕ RH. MACHINE SCREWS W/SQ. NUTS	STEEL	SH.#38
80	4	L H/2" x H/2" x 58" LG.	1020	SH.#39
81	4	L H/2" x H/2" x 17 1/2 LG.	1020	SH.#39
82	8	3/16" x 1 1/2" F.B. 22 1/2" LG.	1020	SH.#39
83	2	14 GA. SCREEN 1/2" MESH, 17 1/2 X 57 1/2" LG.	1020	SH.#39
84	2	L H/2" x H/2" x 3/16" x 5-1/4" LG.	STEEL	SH.#39
85	2	CLIP 4" X H/2" X 2 1/2"	STEEL	SH.#39
86	2	5" F. 6.7# 11" LG.	STEEL	SH.#39
87	8	3/8" ϕ N.C. BOLTS W/HEX. NUTS	STEEL	SH.#39
[illegible]	8	3/8" [illegible] EYE BOLT WASHER	COMM'L	[illegible]

GRAPHIC SCALE

1 1/2" = 1'-0" 6" 0 1

SYMBOL	DESCRIPTION	DATE	APPROVAL

REVISIONS

AMMANN & WHITNEY
CONSULTING ENGINEERS
111-8TH AVENUE, NEW YORK, N. Y.

DEPARTMENT OF THE ARMY
OFFICE OF THE CHIEF OF ENGINEERS
MILITARY CONSTRUCTION - ENGINEERING DIVISION
WASHINGTON, D. C.

DRAWN BY: G.C.
TRACED BY: G.C
CHECKED BY: M.S.A.
SUBMITTED: [illegible]
AMMANN & WHITNEY
APPROVED: [illegible]
CHIEF M. & P.S. BRANCH CHIEF ENGINEERING DIVISION, MIL. CONSTR. O.C.E.
APPROVED FOR
DATE:

TOLERANCE & DIMENSIONS EXCEPT AS NOTED
FROM FINISHED SURFACES
DECIMAL ±
FRACTIONAL ±
ANGULAR ±
FROM UNFINISHED SURFACES
FRACTIONAL ±
ANGULAR ±
[illegible]

AMMUNITION MAINTENANCE FACILITY

AMMUNITION MAINTENANCE BUILDING

POWER CONVEYOR GENERAL ASSEMBLY

DATE: 12 JULY 1966

SCALE 1 1/2" = 1'-0" SPEC. NO. 16-06-384-66-CE

DRAWING NUMBER 36-69-09

SHEET 30 OF 45