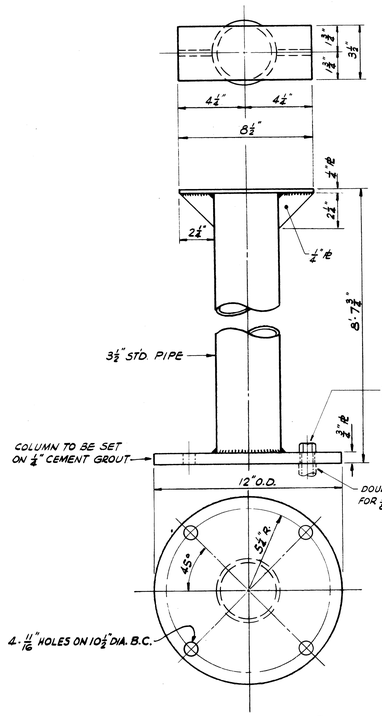

DETAIL 2 (28 45)
SCALE: ¼" = 1"
COLUMN SUPPORT

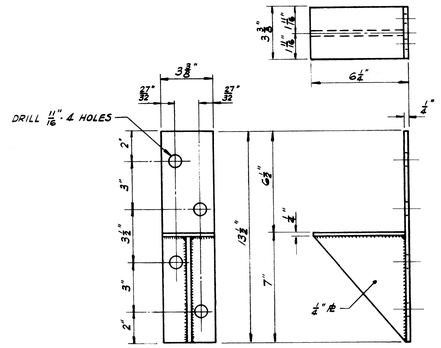

DETAIL 1 (29 29)
SCALE: ¼" = 1"
PERCH

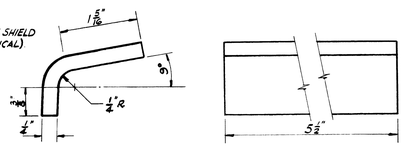

DETAIL 6 (29 29)
SCALE: 1" = 1"
CLAMP

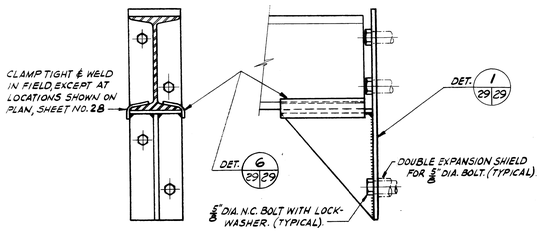

DETAIL 7 (28 29)
SCALE: ¼" = 1"
PERCH ASSEMBLY

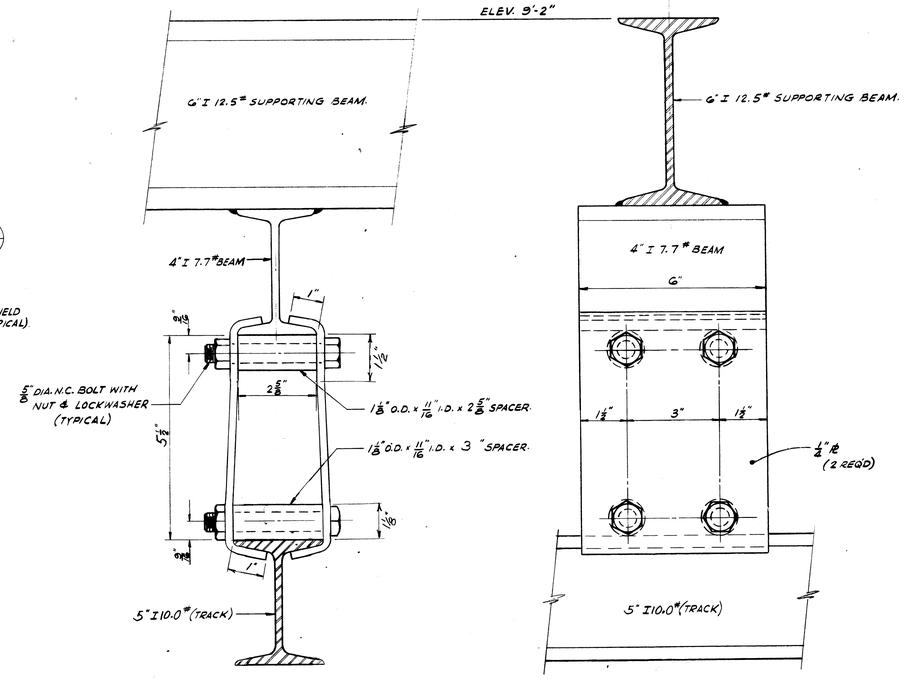

DETAIL 5 (28 29)
SCALE: NTS
TRACK HANGER CLAMP

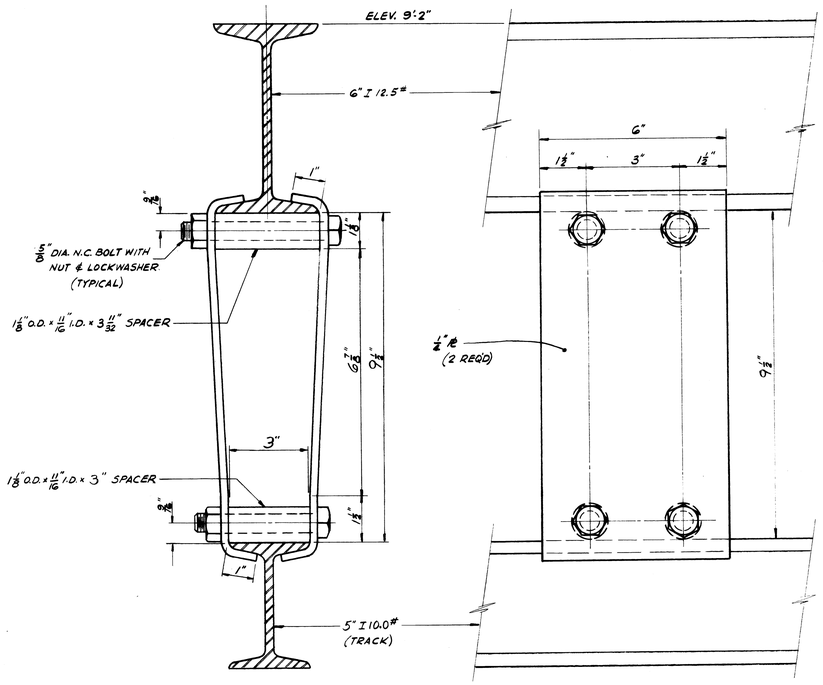

DETAIL 3 (28 29)
SCALE: NTS
TRACK HANGER CLAMP

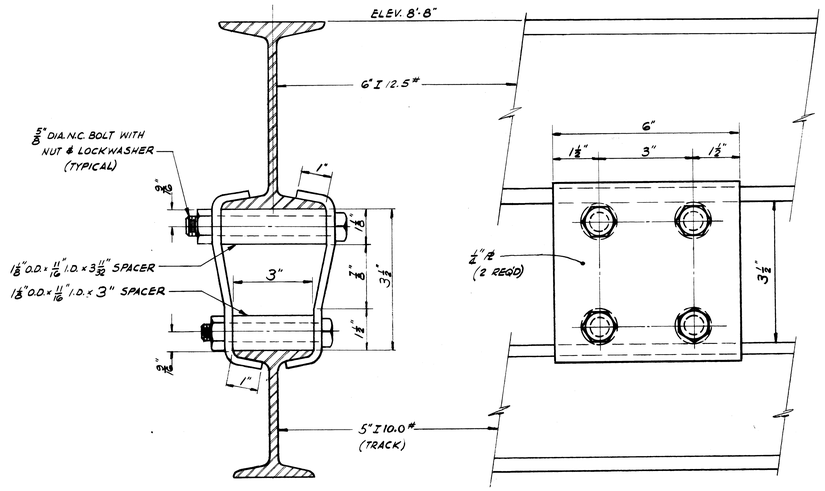

DETAIL 4 (28 29)
SCALE: NTS
TRACK HANGER CLAMP

GRAPHIC SCALES

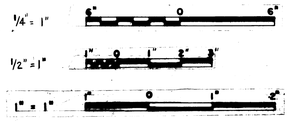

ADAPTED FROM N.F.S.O.D. NO. 1044M12-1, 1044M12-2 & 1044M12-3

SYMBOL	DESCRIPTION	DATE	APPROVAL
1	REV. DET. 3-28-29, 4-28-29, 5-28-29.	22 AUG 68	[illegible]

REVISIONS

AMMANN & WHITNEY
CONSULTING ENGINEERS
111-8TH AVENUE, NEW YORK, N.Y.

DEPARTMENT OF THE ARMY
OFFICE OF THE CHIEF OF ENGINEERS
MILITARY CONSTRUCTION - ENGINEERING DIVISION
WASHINGTON, D.C.

DRAWN BY: G.C.
TRACED BY: G.C.
CHECKED BY: M.S.A.
SUBMITTED: BY [signature] AMMANN & WHITNEY
APPROVED: [signature] CHIEF M. & P.S. BRANCH
APPROVED FOR
DATE:

AMMUNITION MAINTENANCE FACILITY
AMMUNITION MAINTENANCE BUILDING
MONORAIL CONVEYOR SYSTEM DETAILS

APPROVED: [signature] CHIEF ENGINEERING DIVISION, MIL. CONSTR. O.C.E.
DATE: 18 JULY 1966
SCALE AS NOTED
SPEC. NO. 16-06-324-66-CE
DRAWING NUMBER 35-69-09
SHEET 29 OF 45