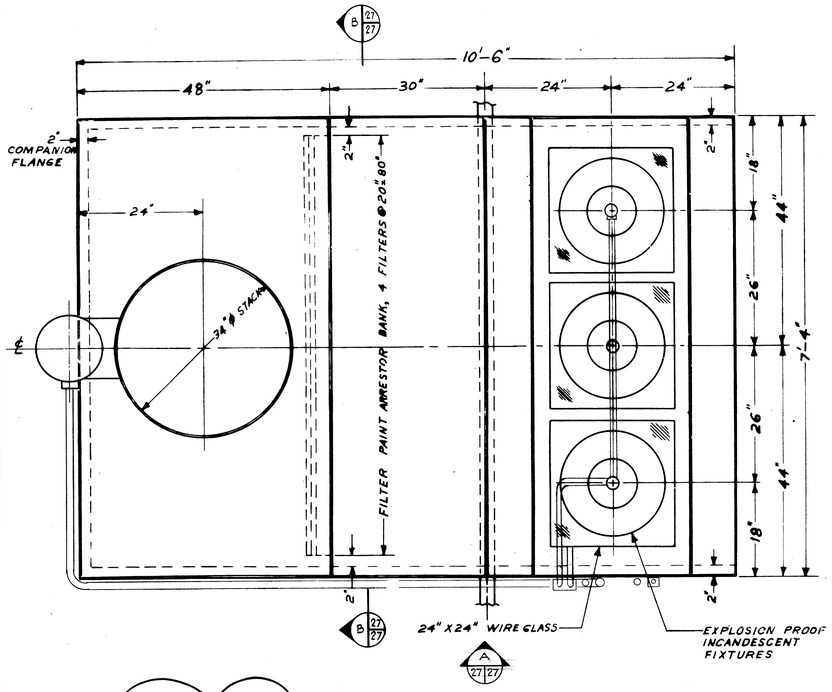

ROOF PLAN ASSEMBLY

SCALE : 1" = 1'-0"

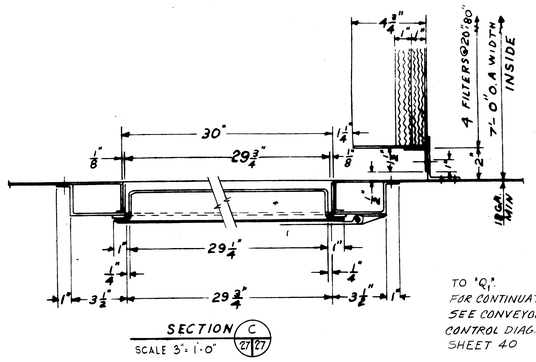

SECTION C

SCALE 3" = 1'-0"

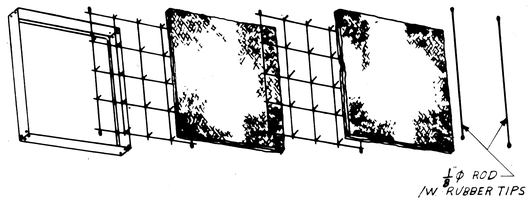

DETAIL 2 20"X20" PAINT ARRESTORS

SCALE NONE

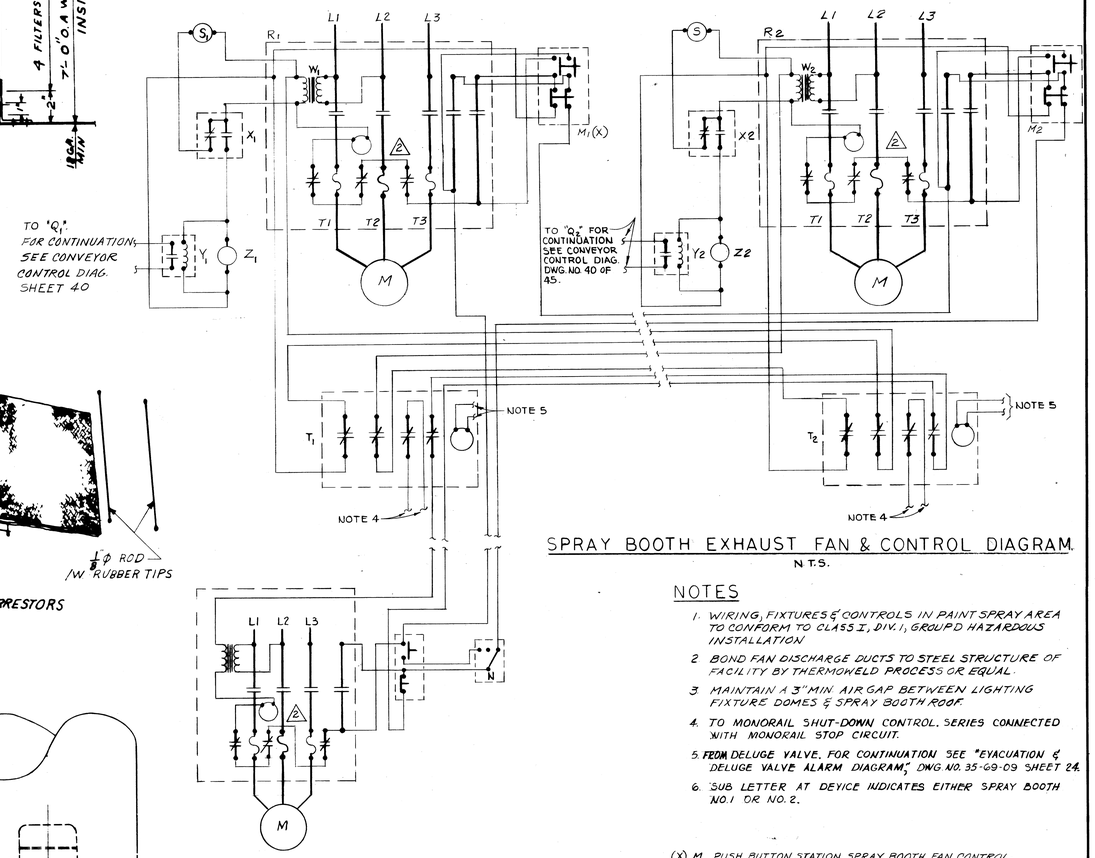

SPRAY BOOTH EXHAUST FAN & CONTROL DIAGRAM

N.T.S.

SUPPLY FAN CONTROL DIAGRAM

N.T.S.

NOTES

1. WIRING, FIXTURES & CONTROLS IN PAINT SPRAY AREA TO CONFORM TO CLASS I, DIV. 1, GROUP D HAZARDOUS INSTALLATION.
2. BOND FAN DISCHARGE DUCTS TO STEEL STRUCTURE OF FACILITY BY THERMOWELD PROCESS OR EQUAL.
3. MAINTAIN A 3" MIN. AIR GAP BETWEEN LIGHTING FIXTURE DOMES & SPRAY BOOTH ROOF.
4. TO MONORAIL SHUT-DOWN CONTROL, SERIES CONNECTED WITH MONORAIL STOP CIRCUIT.
5. FROM DELUGE VALVE. FOR CONTINUATION SEE "EVACUATION & DELUGE VALVE ALARM DIAGRAM," DWG NO. 35-69-09 SHEET 24.
6. SUB LETTER AT DEVICE INDICATES EITHER SPRAY BOOTH NO. 1 OR NO. 2.

(X) M. PUSH BUTTON STATION, SPRAY BOOTH FAN CONTROL.
N. SELECTOR SWITCH - "HAND-OFF-AUTO" AT SUPPLY FAN CONTROLLER
P. SPRAY BOOTH LIGHT CONTROL SWITCH.
Q. FAN-PRESSURE BY-PASS SWITCH.
R. COMBINATION CIRCUIT BREAKER & MAGNETIC MOTOR STARTER W/ PUSH BUTTON IN COVER, SIZE 1, NEMA 7 ENCLOSURE.
S. NO OR LOW EXHAUST AIR ALARM BELL.
T. DELUGE ALARM RELAY.
W. CONTROL TRANSFORMER 230/440 Y TO 115 Y AC 250 VA.
X. MERCURY AIR PRESSURE SWITCH.
Y. AUXILIARY RELAY CONVEYOR STOP CIRCUIT.
Z. AIR SUPPLY SOLENOID

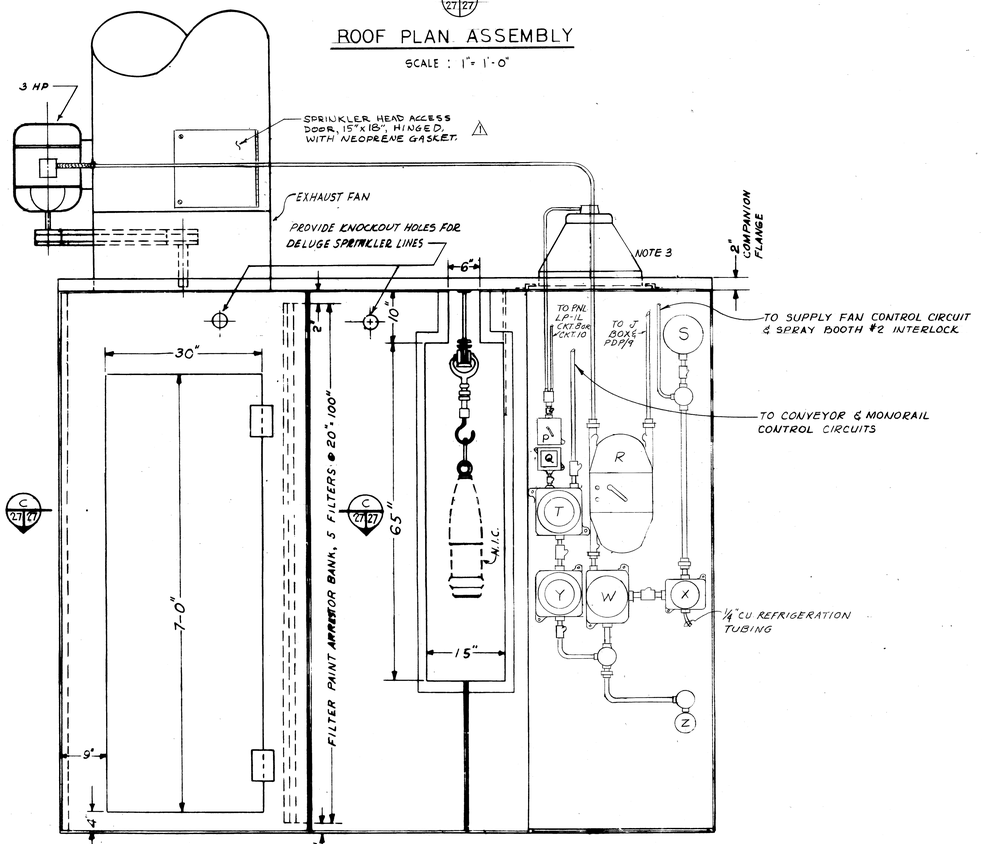

ELEVATION

SCALE 1" = 1'-0"

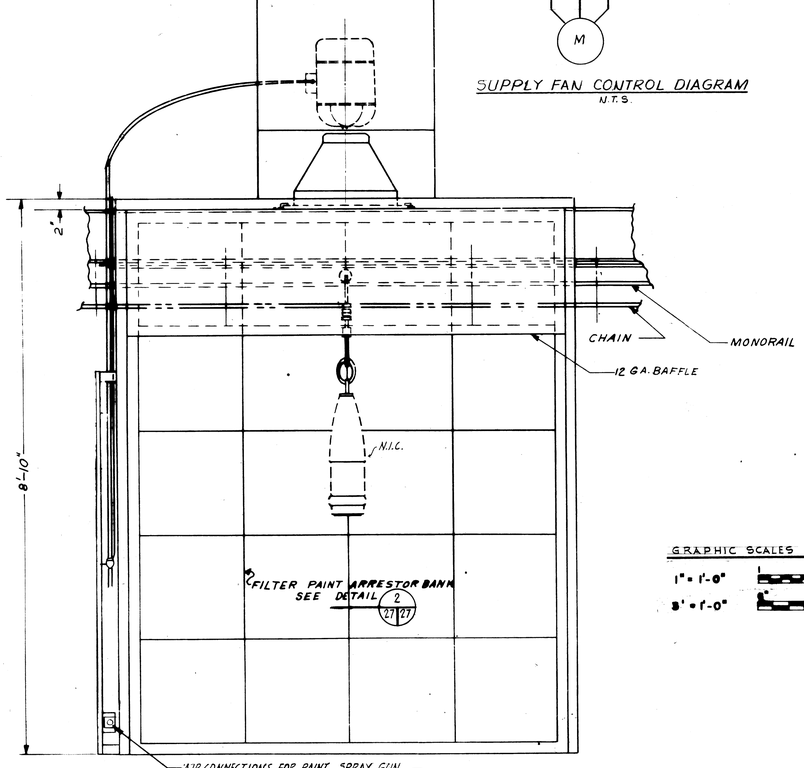

SECTION

SCALE 1" = 1'-0"

GRAPHIC SCALES

1" = 1'-0"

3" = 1'-0"

SYMBOL	DESCRIPTION	DATE	APPROVAL
2	ADDED O.L. RELAY & FUSE TO CONTROL DIAGRAMS.	22 AUG 68	
1	ADDED ACCESS DOOR.	22 AUG 68	

REVISIONS

AMMANN & WHITNEY
CONSULTING ENGINEERS
111-8TH AVENUE, NEW YORK, N.Y.

DEPARTMENT OF THE ARMY
OFFICE OF THE CHIEF OF ENGINEERS
MILITARY CONSTRUCTION - ENGINEERING DIVISION
WASHINGTON, D.C.

DRAWN BY: B.V.
TRACED BY: B.V.
CHECKED BY: M.S.A.
SUBMITTED BY AMMANN & WHITNEY
APPROVED: CHIEF M. & P.S. BRANCH
APPROVED: CHIEF ENGINEERING DIVISION, MIL. CONSTR. O.C.E.
DATE: 18 JULY 1966
APPROVED FOR
DATE:

AMMUNITION MAINTENANCE FACILITY

AMMUNITION MAINTENANCE BUILDING

SMALL PAINT SPRAY BOOTHS PLANS & DETAILS

SCALE AS NOTED
SPEC. NO. DA-06-334-AE-CE
DRAWING NUMBER 35-69-09
SHEET 27 OF 45

TOLERANCE & DIMENSIONS EXCEPT AS NOTED
FROM FINISHED SURFACES
DECIMAL ±
FRACTIONAL ±
ANGULAR ±
FROM UNFINISHED SURFACES
FRACTIONAL ± 1/32"
ANGULAR ± 30'
SHARP CORNERS & EDGES
BREAKS TO APPROX. 1/32" RL.

ADAPTED FROM W.F.S.O.D. NO. 1045