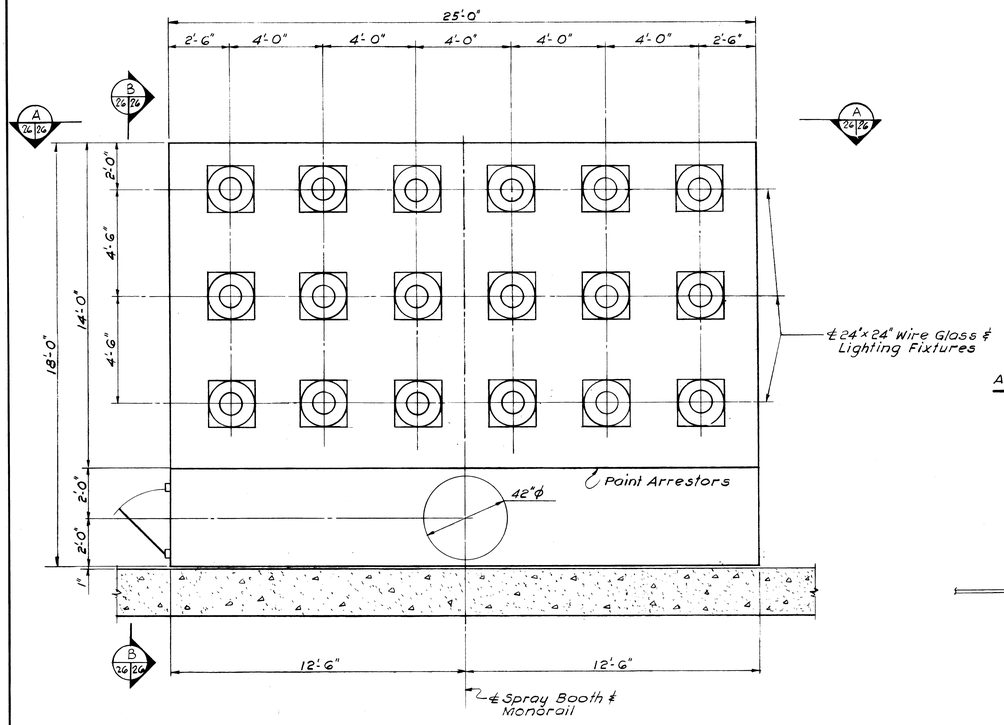

ROOF PLAN

Scale: 3/8" = 1'-0"

NOTES

1. Wire Glass to be removable from inside Spray Booth
2. Booth Manufacturer may support Roof of Booth from Monorail Support Beam (BMF) as required, or provide Hanging Ceiling from Structure (8 PSF. Max.)
3. Provide Openings through Booth Roof for Monorail Clip Supports.

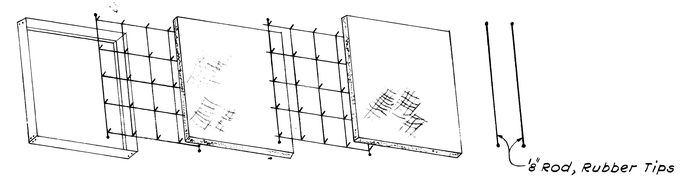

DETAIL 2/26/26

20"x 20 PAINT ARRESTORS

NOTE:
All Filter Cells are uniform in size and each equipped with two (2) 20"x20"x1" Paint Arrestor Filters.

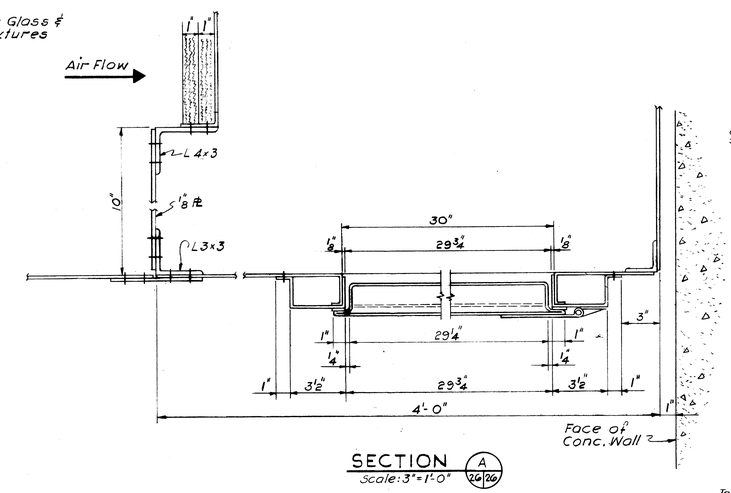

SECTION A 26/26

Scale: 3" = 1'-0"

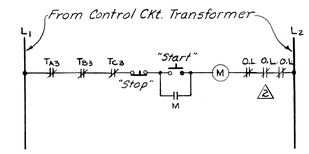

SUPPLY-AIR FAN CONTROL CIRCUIT

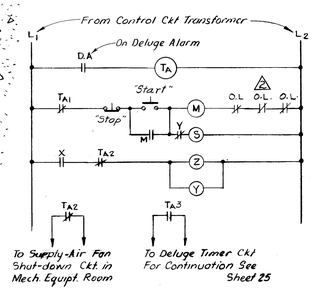

ONE LINE DIAGRAM FOR SPRAY BOOTH CONTROL CIRCUIT

ELECTRICAL NOTES

1. Wiring, fixtures & equipment in paint spray areas to conform to Class I, Div. I, Group D installations.
2. Bond fan discharge duct to steel structure of facility by Thermoweld process or equal.
3. Maintain a 3" min. air-gap between lighting fixture dome & spray booth roof.
4. Contacts "TA" of Deluge Relay Spray Booth - This Dwg.
   " "TB" " " " Spray Booth #1 } Sheet 27
   " "TC" " " " Spray Booth #2 }

B – Junction Conduit Fitting
M – Coil Contact
O – Spray Booth light control switches
S – No or Low exhaust air alarm bell
T – Deluge alarm relay
W – Control circuit transformer, 230/440v to 115v A.C. 250 VA
X – Mercury air pressure switch.
Y – Auxiliary Relay
Z – Air Supply Solenoid

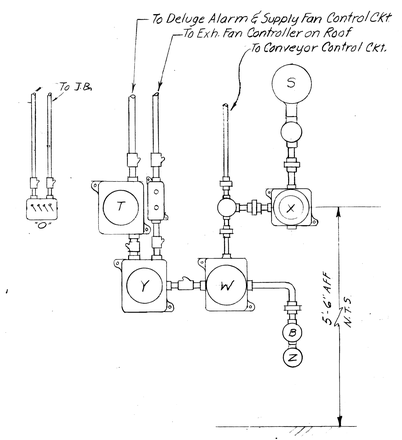

SPRAY BOOTH CONTROL PANEL

Scale: 1" = 1'-0"

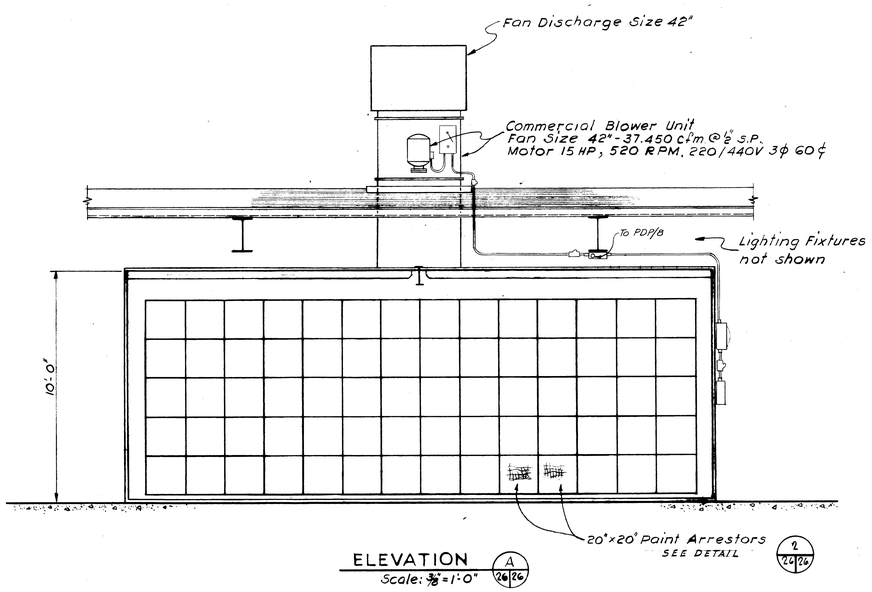

ELEVATION A 26/26

Scale: 3/8" = 1'-0"

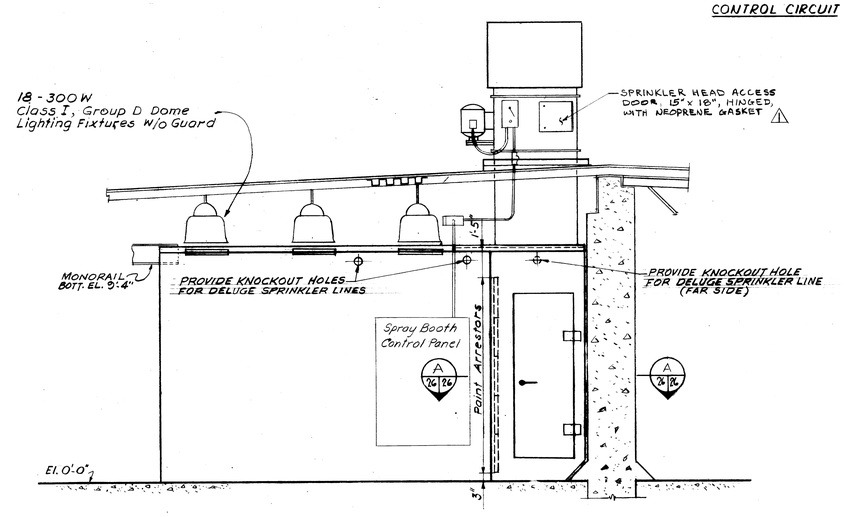

ELEVATION B 26/26

Scale: 3/8" = 1'-0"

GRAPHIC SCALE

3" = 1'-0" 3" 0 3" 6" 9"

3/8" = 1'-0" 3' 0 3' 6'

SYMBOL	DESCRIPTION	DATE	APPROVAL
2	ADDED O.L. RELAYS TO CONTROL CIRCUITS	22 AUG 69	
1	ADDED ACCESS DOOR.	22 AUG 68	

REVISIONS

AMMANN & WHITNEY
CONSULTING ENGINEERS
111-8TH AVENUE, NEW YORK, N.Y.

DEPARTMENT OF THE ARMY
OFFICE OF THE CHIEF OF ENGINEERS
MILITARY CONSTRUCTION - ENGINEERING DIVISION
WASHINGTON, D.C.

DRAWN BY: W.L.
TRACED BY: W.L.
CHECKED BY: S.B.
SUBMITTED By AMMANN & WHITNEY
APPROVED: CHIEF M. & P.S. BRANCH
APPROVED FOR
DATE:

AMMUNITION MAINTENANCE FACILITY

AMMUNITION MAINTENANCE BUILDING

LARGE PAINT SPRAY BOOTH
PLAN & SECTIONS

APPROVED: CHIEF ENGINEERING DIVISION, MIL. CONSTR. O.C.E.
DATE: 18 JULY 1966

SCALE AS NOTED SPEC. NO. 16-06-324-66-02

DRAWING NUMBER 35-69-09

SHEET 26 OF 45