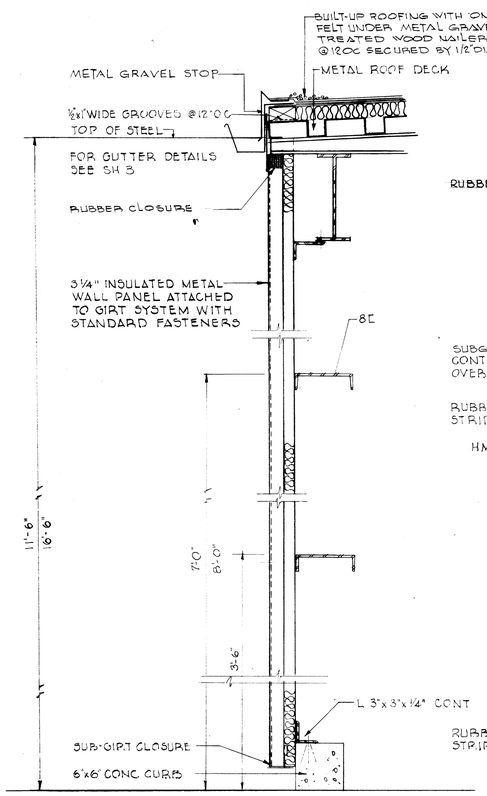

SECTION A 4/6

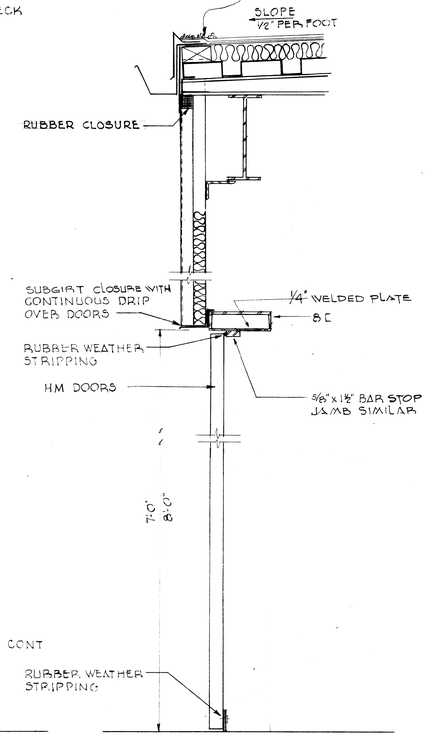

SECTION B 4/6

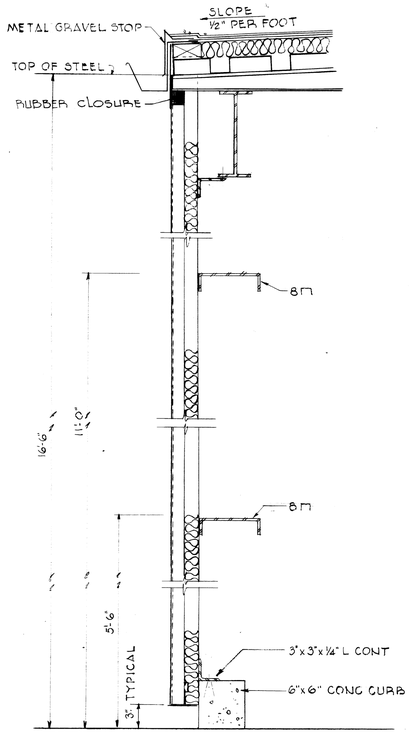

SECTION C 4/6

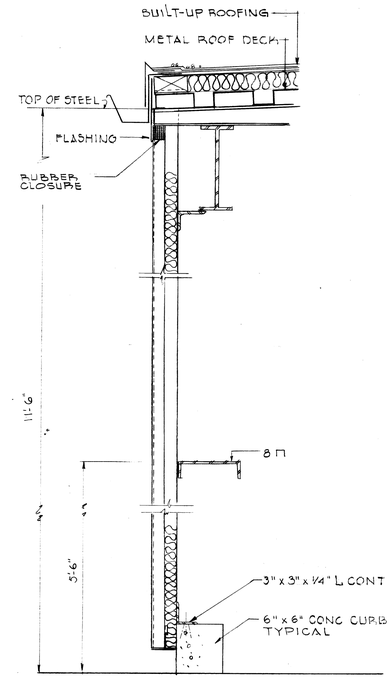

SECTION D 4/6

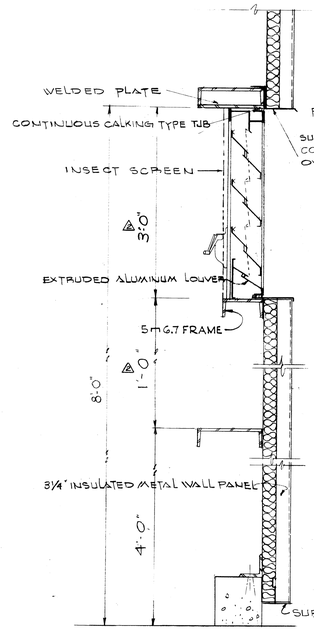

SECTION E 4/6
(NOT TO SCALE)

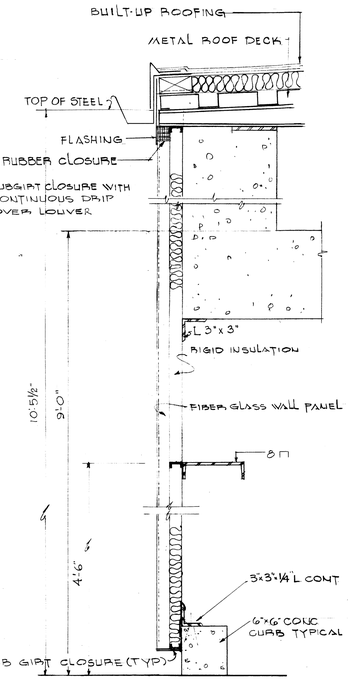

SECTION F 4/6

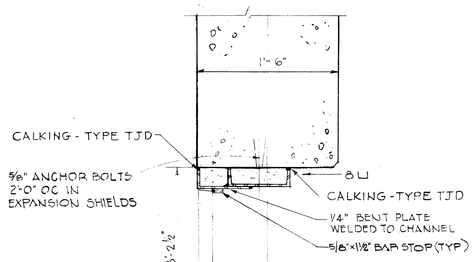

DETAIL 4/1/6

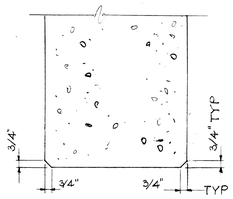

DETAIL 6/1/6

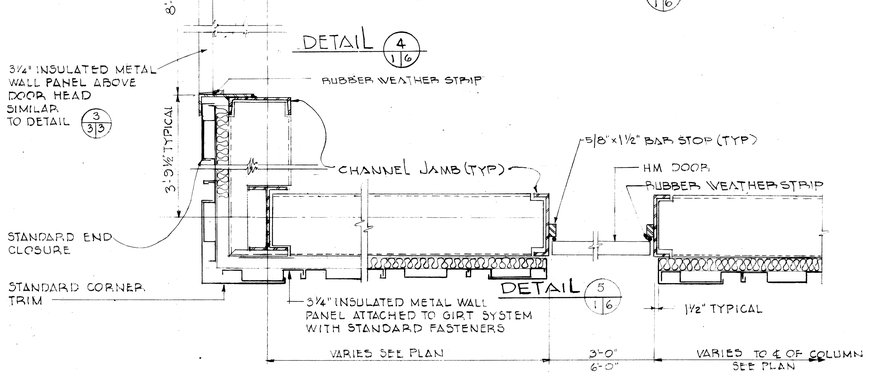

DETAIL 5/1/6

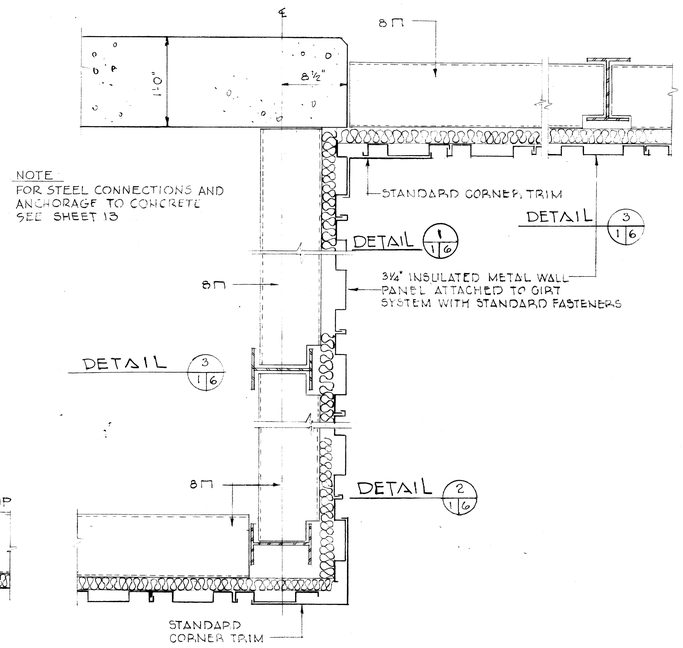

NOTE
FOR STEEL CONNECTIONS AND ANCHORAGE TO CONCRETE SEE SHEET 13

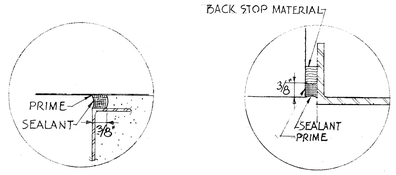

TJD TJB
JOINT SHAPE SYMBOLS
CALKING DETAILS

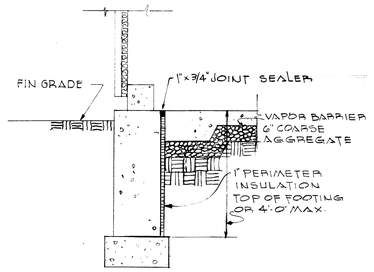

DETAIL 1/5/6

GRAPHIC SCALE
1 1/2" = 1'-0"

SYMBOL	DESCRIPTION	DATE	APPROVAL
2	CHANGED DIMENSIONS & ADDED NOTE TO SEC. E/4-6	22 AUG 66	
1	REVISED DOOR DETAIL 4 & 5 & REVISED DETAIL 1	8/22/66	

REVISIONS

AMMANN & WHITNEY
CONSULTING ENGINEERS
111-8TH AVENUE, NEW YORK, N.Y.

DEPARTMENT OF THE ARMY
OFFICE OF THE CHIEF OF ENGINEERS
MILITARY CONSTRUCTION - ENGINEERING DIVISION
WASHINGTON, D.C.

DRAWN BY: R
TRACED BY: R
CHECKED BY: DR
SUBMITTED BY: AMMANN & WHITNEY

AMMUNITION MAINTENANCE FACILITY

AMMUNITION MAINTENANCE BUILDING

WALL SECTIONS & DETAILS
ARCHITECTURAL

APPROVED: CHIEF M. & P.S. BRANCH
APPROVED: CHIEF ENGINEERING DIVISION, MIL. CONSTR. O.C.E.
DATE: 18 JULY 1966

APPROVED FOR
DATE:

SCALE 1 1/2" = 1'-0"
SPEC. NO. 16-08-32466-C

DRAWING NUMBER 35-69-09
SHEET 6 OF 45