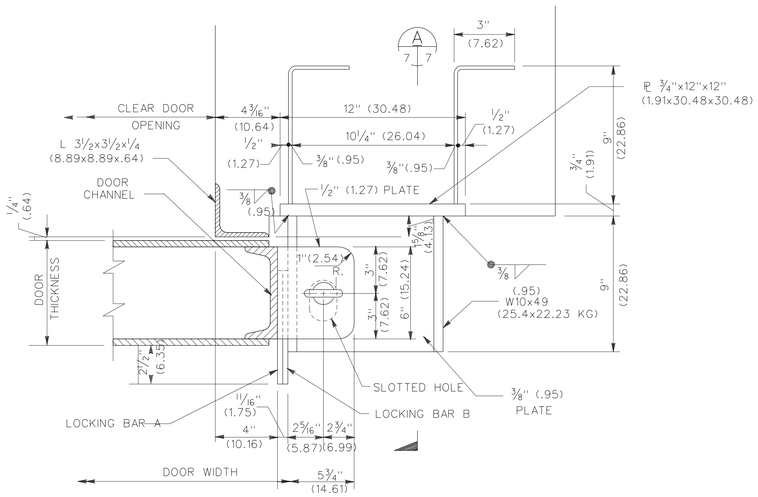

PLAN
SCALE: 3"=1'-0"
(1 = 4)

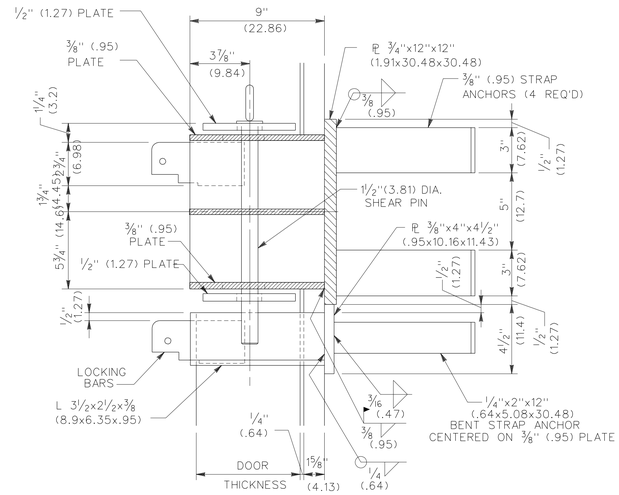

SECTION A
SCALE: 3"=1'-0"
(1 = 4)

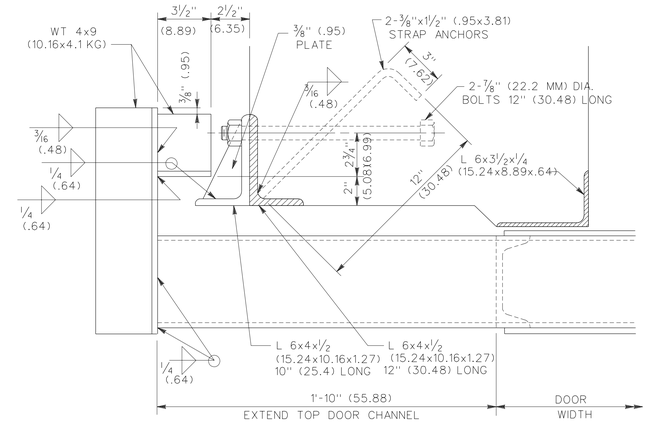

PLAN

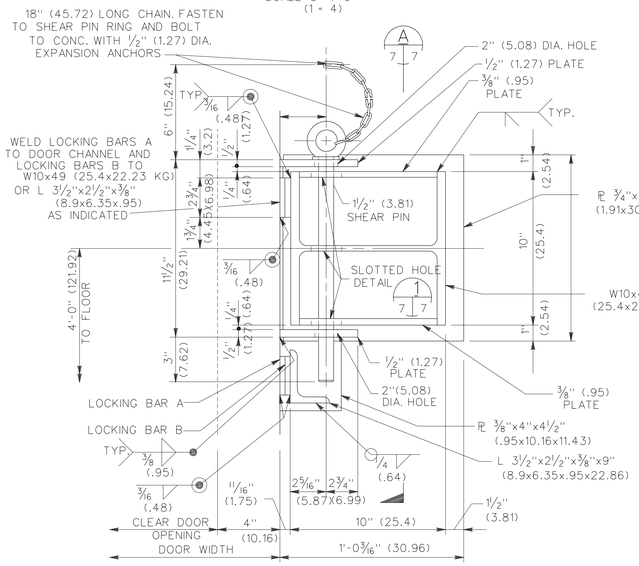

ELEVATION
SCALE: 3"=1'-0"
(1 = 4)

RESTRAINING BRACKET DETAILS

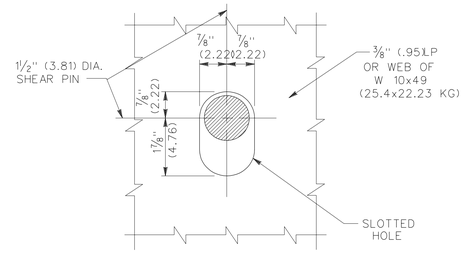

DETAIL 1
NO SCALE

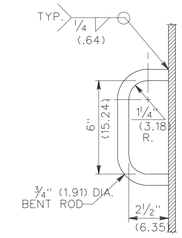

DOOR HANDLE
SCALE: 3"=1'-0"
(1 = 4)

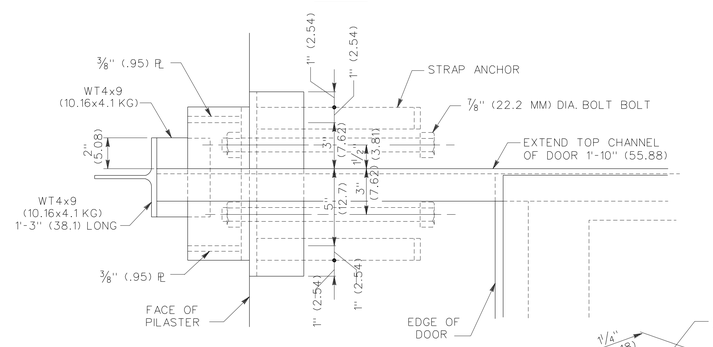

ELEVATION

DETAIL 5
SCALE: 3"=1'-0"
(1 = 4)

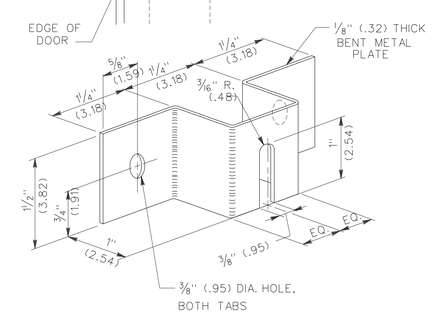

CHAIN GUIDE AND HOLDER
NO SCALE

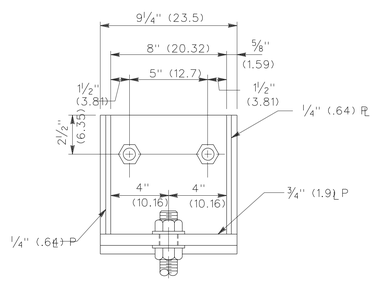

ELEVATION

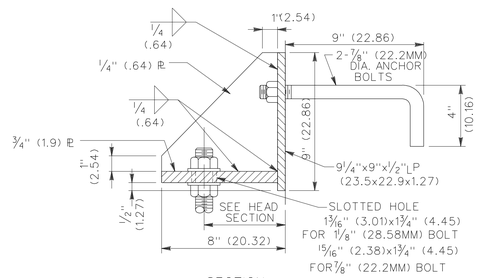

SECTION

TRACK SUPPORT BRACKET
TYPE I
SCALE: 3"=1'-0"
(1 = 4)

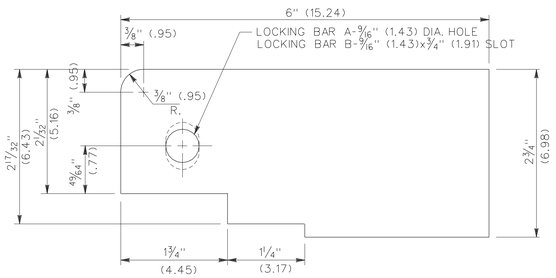

LOCKING BAR 'A'-5/16"(.79) THICK
LOCKING BAR 'B'-3/8"(.95) THICK
2 EACH REQUIRED

LOCKING BARS
NO SCALE

LOCKING BARS TO CONFORM TO MILITARY SPECIFICATION MIL-H-43905A

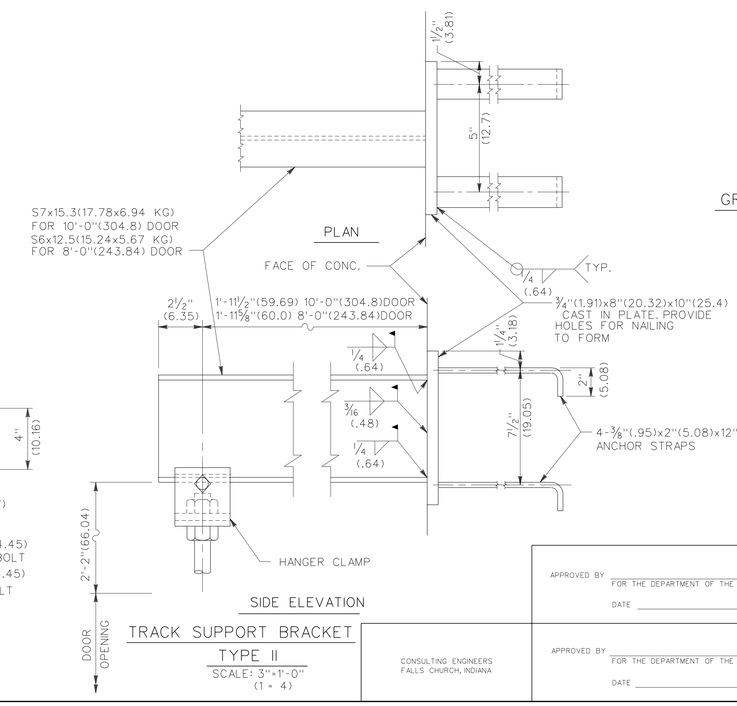

SIDE ELEVATION

TRACK SUPPORT BRACKET
TYPE II
SCALE: 3"=1'-0"
(1 = 4)

GRAPHIC SCALE:
3" = 1'-0"
1"0 1"2" 3" 4" 5" 6" 7" 8" 9" 10" 11"

NOTE:
TITLE BLOCK CHANGED BY NATHAN C. HALE ASSOCIATES TO DEPICT CONCRETE ARCH. REMAINING INFORMATION TRANSFERRED INTACT FROM O.C.E. DRAWING NO. 33-15-73 SHEET 7 OF 9.

SYMBOL	DESCRIPTION	DATE	APPROVAL
3	GENERAL REVISION/SIMONS-EASTERN CO.	19JUL84	JYM

BLACK & VEATCH
CONSULTING ENGINEERS
KANSAS CITY, MISSOURI

DEPARTMENT OF THE ARMY
OFFICE OF THE CHIEF OF ENGINEERS
MILITARY CONSTRUCTION - ENGINEERING DIVISION
WASHINGTON, D.C.

DRAWN BY: G.I.C.
TRACED BY: G.I.C.
CHECKED BY: H.D.L.
SUBMITTED BY: W.V. HILL
APPROVED: O.F.M. CHIEF ADV. TECH. BR.
APPROVED: LEE S. GARRETTE CHIEF ENGINEERING DIVISION MIL. PROGR., O.C.E.
DATE: 11APR79

MAGAZINE, CONCRETE OVAL-ARCH, EARTH COVERED
MISCELLANEOUS BLAST DOOR DETAILS

CONSULTING ENGINEERS
FALLS CHURCH, INDIANA

APPROVED BY _____ FOR THE DEPARTMENT OF THE NAVY
DATE _____

APPROVED BY _____ FOR THE DEPARTMENT OF THE AIR FORCE
DATE _____

APPROVED FOR:
DATE: _____

SCALE:
SPEC. NO.
DRAWING NUMBER 33-15-74
SHEET 7 OF 9