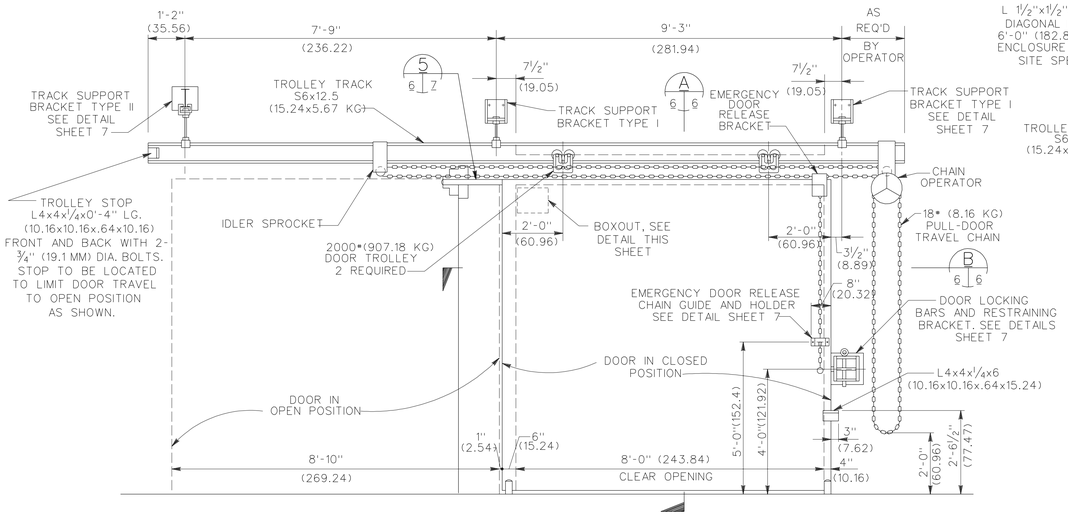

ELEVATION
SCALE: ¾"=1'-0" (1 = 16)

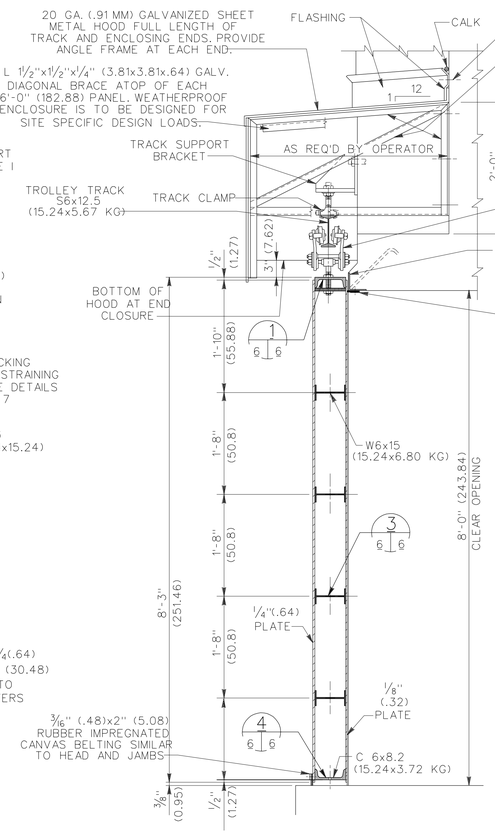

SECTION A
SCALE 1"=1'-0" (1 = 12)

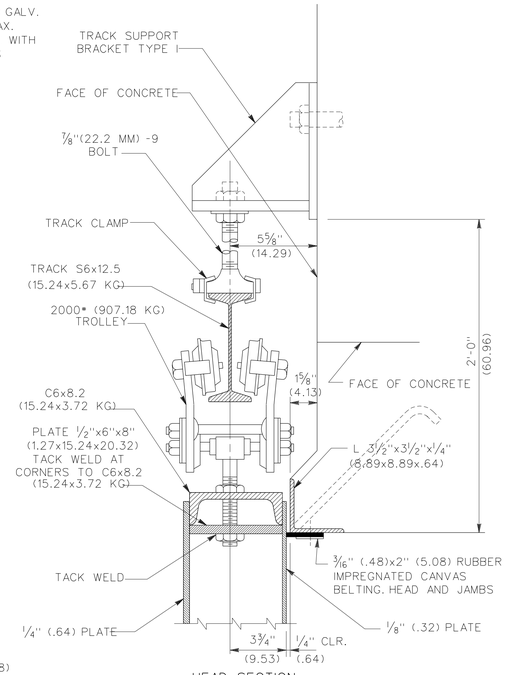

HEAD SECTION
SCALE 3"=1'-0" (1 = 4)

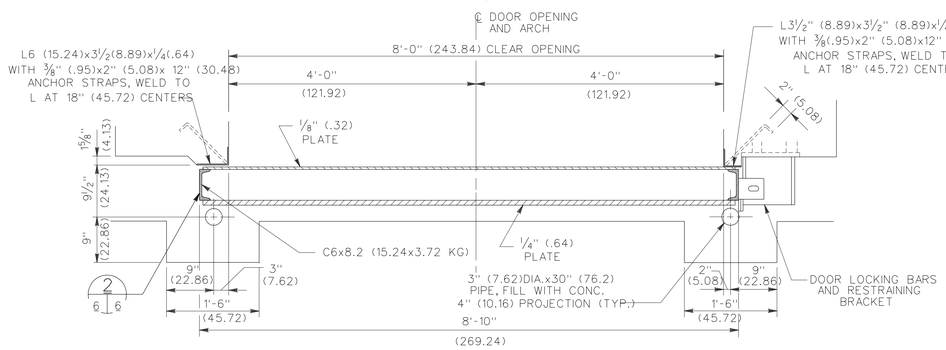

SECTION B
SCALE 1"=1'-0" (1 = 24)

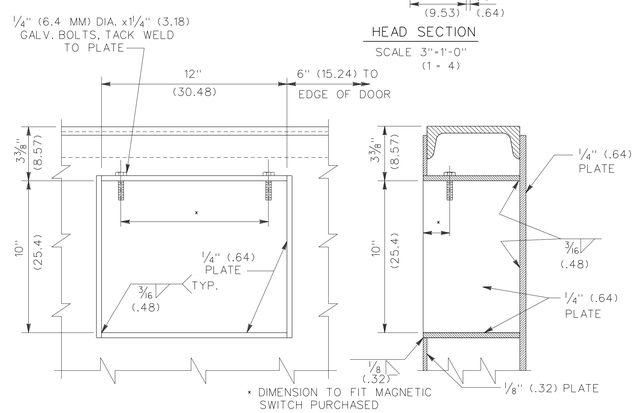

INSIDE ELEVATION SECTION

BOXOUT DETAILS
SCALE 3"=1'-0" (1 = 4)

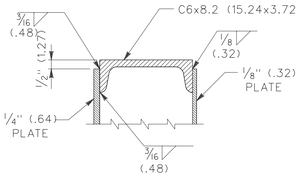

DETAIL 1
SCALE 3"=1'-0" (1 = 4)

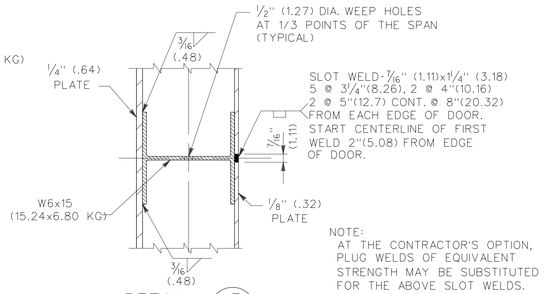

NOTE:
AT THE CONTRACTOR'S OPTION, PLUG WELDS OF EQUIVALENT STRENGTH MAY BE SUBSTITUTED FOR THE ABOVE SLOT WELDS.

DETAIL 3
SCALE 3"=1'-0" (1 = 4)

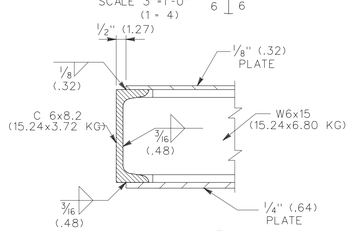

DETAIL 2
SCALE 3"=1'-0" (1 = 4)

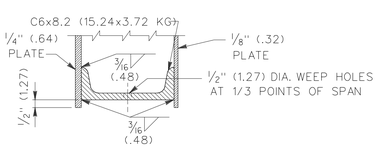

DETAIL 4
SCALE 3"=1'-0" (1 = 4)

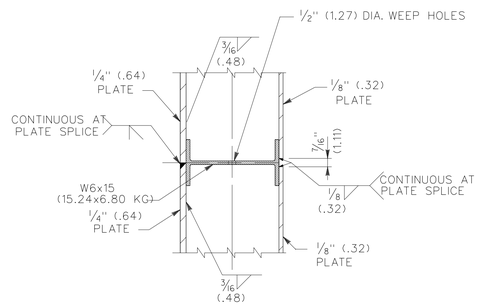

NOTE:
COVER PLATES SHALL BE SPLICED ONLY AS REQUIRED BY THE SIZE OF PLATES AVAILABLE. LOCATION OF SPLICE(S) SHALL BE DETERMINED BY THE CONTRACTOR AND THE SPLICE SHALL CONFORM TO THIS DETAIL.

COVER PLATE SPLICE DETAIL
SCALE 3"=1'-0" (1 = 4)

GRAPHIC SCALES :

SYMBOL	DESCRIPTION	DATE	APPROVAL
1	GENERAL REVISION/SIMONS-EASTERN CO.	19JUL84	JYM

BLACK & VEATCH
CONSULTING ENGINEERS
KANSAS CITY, MISSOURI

DEPARTMENT OF THE ARMY
OFFICE OF THE CHIEF OF ENGINEERS
MILITARY CONSTRUCTION - ENGINEERING DIVISION
WASHINGTON, D.C.

DRAWN BY: G.I.C.
TRACED BY: G.I.C.
CHECKED BY: H.D.L.
SUBMITTED BY: W.V. HILL
APPROVED: O.F.M. CHIEF ADV. TECH. BR.

MAGAZINE, CONCRETE OVAL-ARCH, EARTH COVERED
8'-0" BLAST DOOR

APPROVED: LEE S. GARRETTE
CHIEF ENGINEERING DIVISION MIL. PROGR., O.C.E.
DATE: 11APR79

APPROVED BY _____ FOR THE DEPARTMENT OF THE NAVY
DATE _____

CONSULTING ENGINEERS
FALLS CHURCH, INDIANA

APPROVED BY _____ FOR THE DEPARTMENT OF THE AIR FORCE
DATE _____

APPROVED FOR:
DATE: _____

SCALE:
SPEC. NO.
DRAWING NUMBER 33-15-74
SHEET 6 OF 9