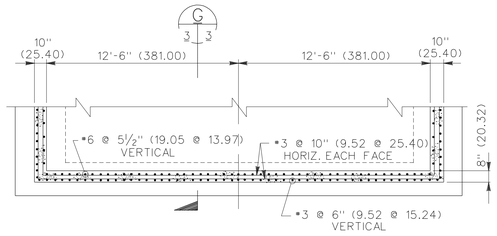

PLAN - REAR WALL
SCALE: ¼"=1'-0" (1 = 48)

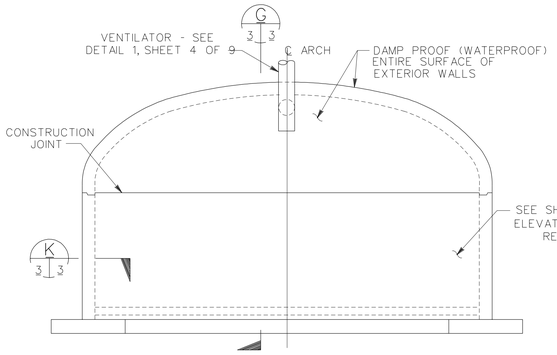

ELEVATION - REAR WALL
SCALE: ¼"=1'-0" (1 = 48)

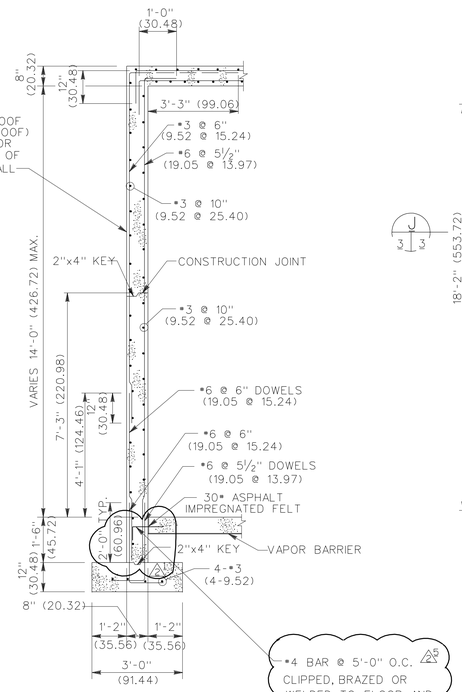

SECTION G
SCALE ½"=1'-0" (1 = 24)

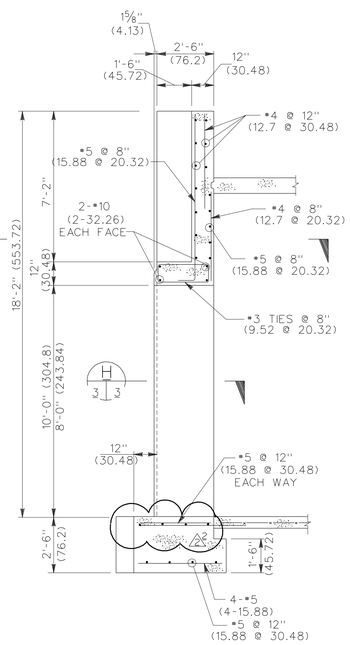

SECTION A
SCALE ⅜"=1'-0" (1 = 32)

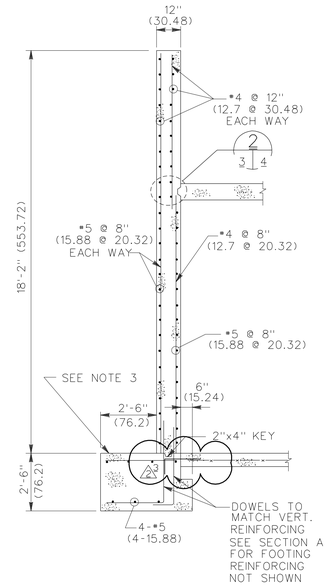

SECTION B
SCALE ⅜"=1'-0" (1 = 32)

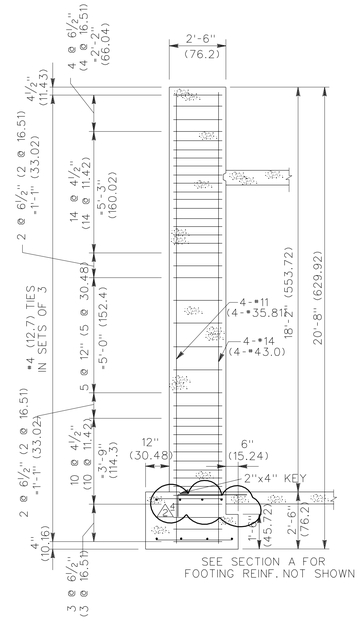

SECTION C
SCALE ⅜"=1'-0" (1 = 32)

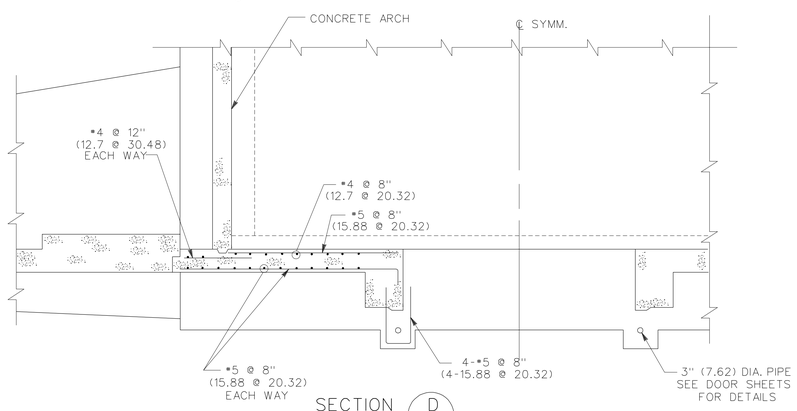

SECTION D
SCALE ⅜"=1'-0" (1 = 32)

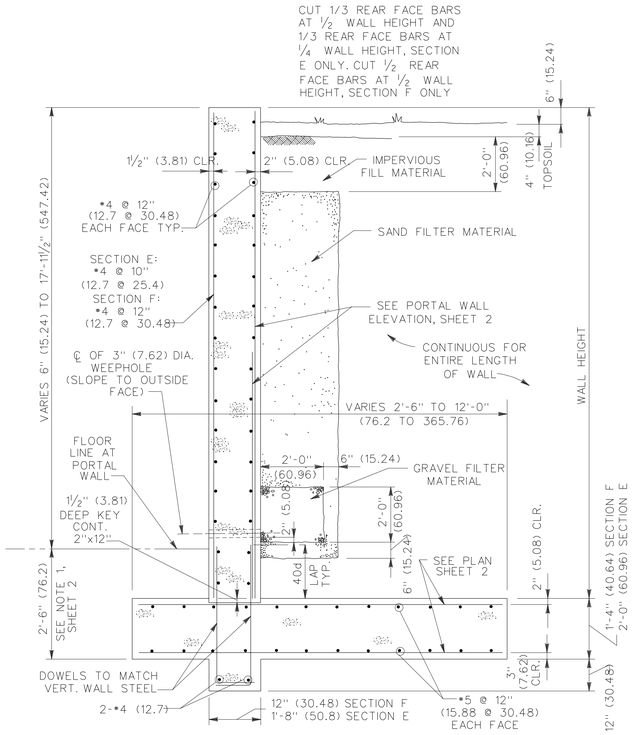

SECTION E F
SCALE ½"=1'-0" (1 = 24)

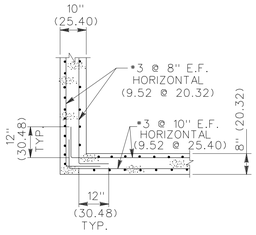

SECTION K
SCALE ½"=1'-0" (1 = 24)

NOTES:

1. PLAN AND ELEVATION OF REAR WALL REVISED, SECTIONS A THRU J REVISED AND SECTION K ADDED BY NATHAN C. HALE ASSOCIATES TO DEPICT CONCRETE ARCH, REMAINING INFORMATION TRANSFERRED INTACT FROM O.C.E. DRAWING NO. 33-15-73, SHEET 3 OF 9.
2. THE SAND AND GRAVEL DRAINAGE SYSTEM SHOWN IN SECTIONS E AND F SHOULD BE TERMINATED AT THE POINT WHERE THE HEADWALL HEIGHT IS INSUFFICIENT TO MAINTAIN THE 2" IMPERVIOUS FILL MATERIAL COVER OVER AT LEAST 6" OF SAND FILTER MATERIAL. PAST THIS POINT, AN ADDITIONAL 6" OF SAND FILTER MATERIAL SHOULD BE ADDED TO "CLOSE IN" THE END OF THE GRAVEL FILTER MATERIAL.
3. TOP OF MAGAZINE PORTAL FOOTING MUST BE MAINTAINED AT FINISHED FLOOR ELEVATION FOR THE FULL 2'-6" BEYOND FACE OF PORTAL TO MAINTAIN SLIDING DOOR OPERATION. DO NOT EXTEND DOCK OR RAMP SLABS UNDER DOOR.
4. AS AN OPTION, DEPENDING ON SITE-SPECIFIC CONDITIONS, THE WEEPHOLES THROUGH THE HEADWALL, SHOWN IN SECTIONS E AND F, MAY BE REPLACED WITH PERFORATED PIPE DRAINS PLACED IN THE GRAVEL FILTER MATERIAL RUNNING LATERALLY BEHIND THE HEADWALL AND CONNECTED TO THE PERIMETER FOOTING DRAINS FOR THE IGLOOS.

GRAPHIC SCALES:

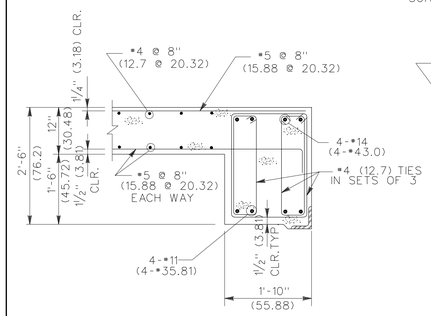

SECTION H
SCALE ¾"=1'-0" (1 = 16)

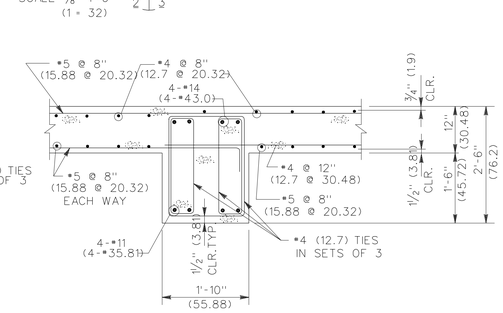

SECTION J
SCALE ¾"=1'-0" (1 = 16)

SYMBOL	DESCRIPTION	DATE	APPROVAL
2	GENERAL REVISION FOR LIGHTNING PROTECTION	11JUN98	WAW
1	GENERAL REVISION/SIMONS-EASTERN CO.	19JUL84	JYM

BLACK & VEATCH
CONSULTING ENGINEERS
KANSAS CITY, MISSOURI

DEPARTMENT OF THE ARMY
OFFICE OF THE CHIEF OF ENGINEERS
MILITARY CONSTRUCTION - ENGINEERING DIVISION
WASHINGTON, D.C.

DRAWN BY: G.I.C.
TRACED BY: G.I.C.
CHECKED BY: H.D.L.
SUBMITTED BY: W.V. HILL
APPROVED: O.F.M. CHIEF ADV. TECH. BR.

MAGAZINE, CONCRETE OVAL-ARCH, EARTH COVERED
PORTAL AND REAR WALL PLAN, ELEVATION AND SECTIONS

APPROVED: LEE S. GARRETTE, CHIEF ENGINEERING DIVISION MIL. PROGR., O.C.E.
DATE: 11APR79

APPROVED BY _____ FOR THE DEPARTMENT OF THE NAVY
DATE _____

CONSULTING ENGINEERS
FALLS CHURCH, INDIANA

APPROVED BY _____ FOR THE DEPARTMENT OF THE AIR FORCE
DATE _____

APPROVED FOR:
DATE: _____

SCALE: SPEC. NO.
DRAWING NUMBER 33-15-74
SHEET 3 OF 9