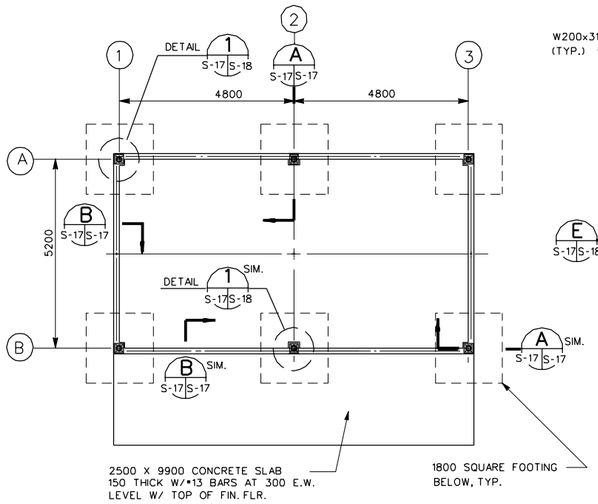

FOUNDATION PLAN

SCALE 1:75

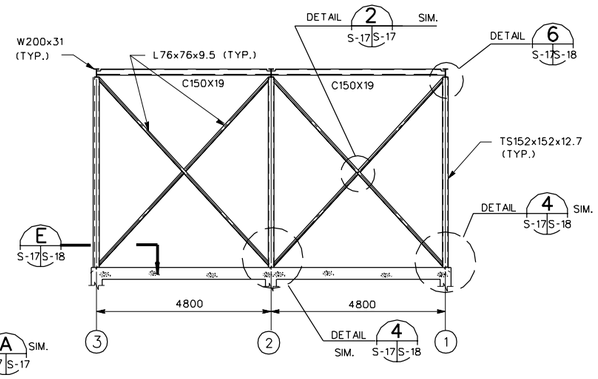

GIRTS, SIDING, ROOFING AND ROOF
FRAMING NOT SHOWN FOR CLARITY

REAR ELEVATION

SCALE 1:75

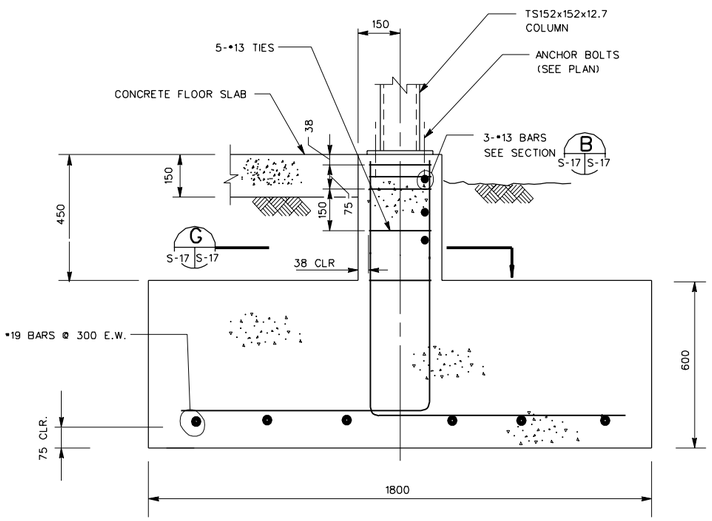

SECTION A

SCALE : 1:10

1. PROVIDE TWO 4570 MIN LONG SECTIONS OF METAL BLEACHERS ONE FOR EACH BAY OF THE ENCLOSURE, 9140 TOTAL. EACH SET SHALL HAVE TEN ROWS.
2. THE BLEACHERS SHALL BE ANCHORED TO THE FLOOR USING MIN. 13 NOM. DIM. EXPANSION ANCHORS. INSTALL ANCHORS ALONG EACH SUPPORT ANGLE AT A MIN. SPACING OF 1000. MIN 75 EMBEDMENT.

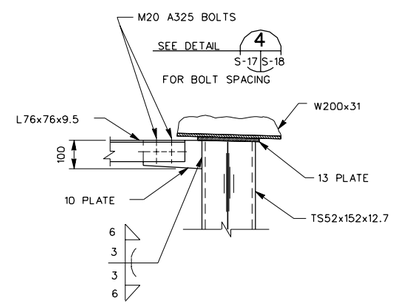

SECTION C

SCALE : 1:10

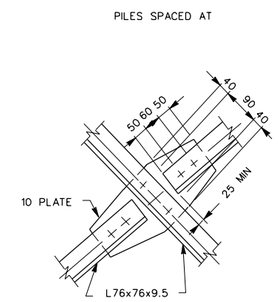

DETAIL 2

SCALE : N.T.S.

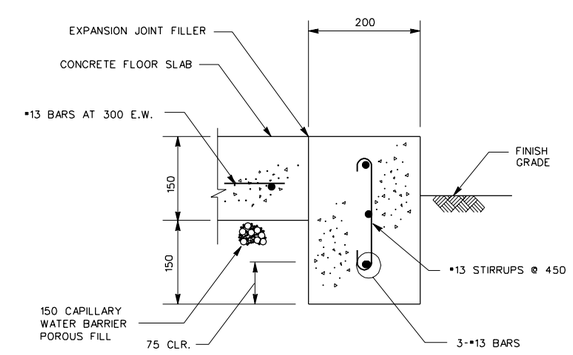

SECTION B

SCALE : N.T.S.

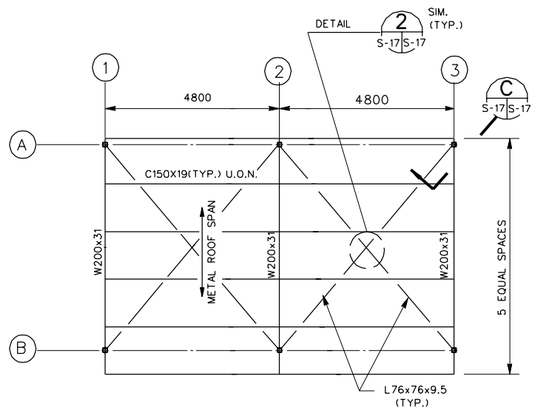

ROOF PLAN

SCALE 1:75

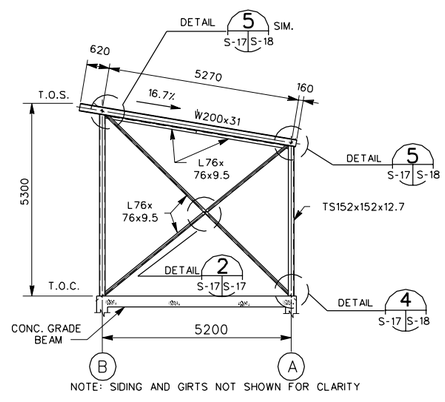

NOTE: SIDING AND GIRTS NOT SHOWN FOR CLARITY

ELEVATION - COL. LINE 3
COL. LINE 1 OPP. HAND
COL. LINE 2 SIM. WITHOUT X-BRACING

SCALE 1:75

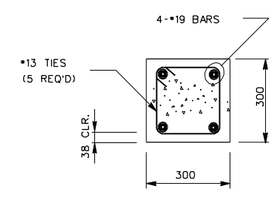

OFFSET AS NECESSARY TO
CLEAR ANCHOR BOLTS

SECTION G

SCALE : 1:10

NOTES:
1. DIMENSIONS ARE IN MILLIMETERS UNLESS OTHERWISE NOTED.
2. SEE S-1 FOR GENERAL STRUCTURAL NOTES.

GRAPHIC SCALES

1:10 — 200 100 0 200 400

1:75 — 1500 750 0 1500 3000

US Army Corps of Engineers

Symbol	Description	Date	Approved	Symbol	Description	Date	Approved

Designed by: REH	Date: 01 APR 98	Rev.	
Dwn by: RLA	Ckd by: REH	Design file no.	
Reviewed by: WAM		Drawing code: STD 179-72-01	
Submitted by: AF		File name: STD57.DGN Project name: 01LAB 98 Plot scale: FULL	

U.S. ARMY ENGINEERING AND SUPPORT CENTER, HUNTSVILLE
HUNTSVILLE, ALABAMA

FORCE XXI/FORCE MODERNIZATION PROGRAM
STANDARD DESIGN

BLEACHER ENCLOSURE (1 OF 2)
PLANS AND ELEVATIONS

Sheet reference number:
S-17
Sheet 1 of 2