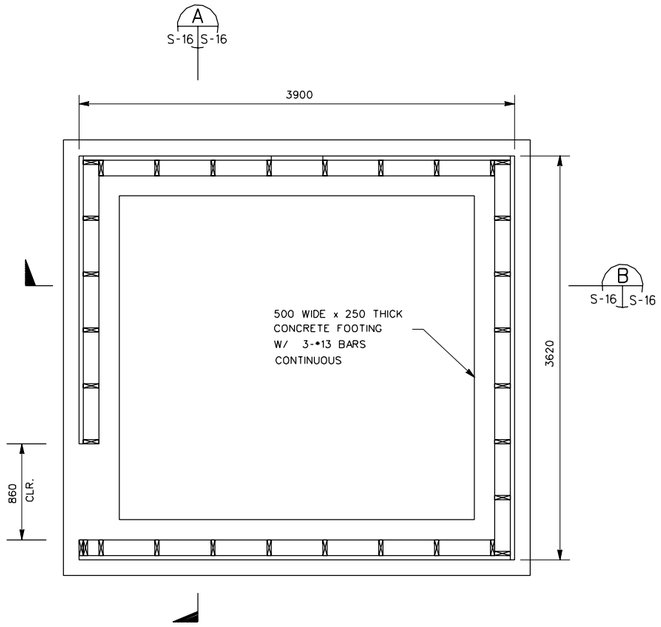

PLAN - MACHINE GUN BUNKER

SCALE : 1:25

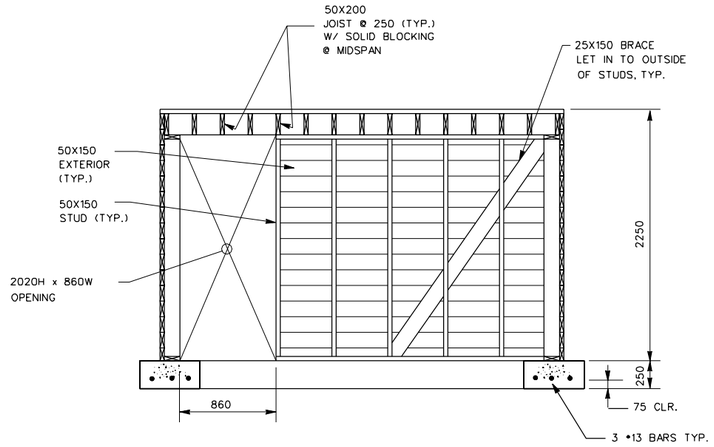

NOTE: SEE CIVIL DWGS. FOR
GROUND ELEVATIONS AND SLOPE

SECTION A

SCALE : 1:25

S-16 S-16

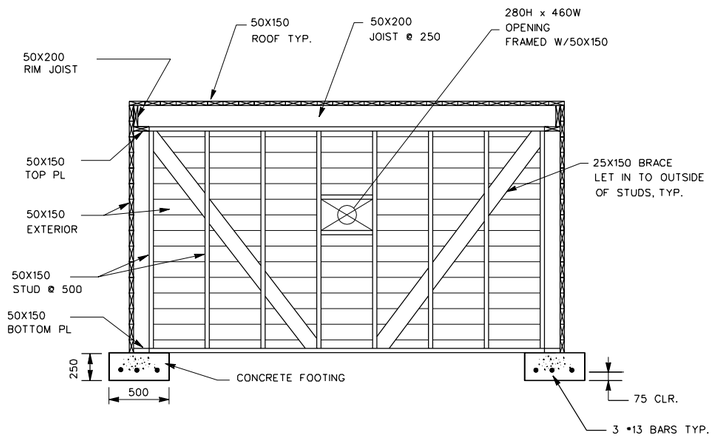

SECTION B

SCALE : 1:25

S-16 S-16

NOTES

1. 1000 MAXIMUM BACKFILL DEPTH ABOVE TOP OF FOOTING.
2. FASTEN EXTERIOR 50X150 TO STUDS WITH 75 LONG GALVANIZED SCREWS, 2 PER BOARD.
3. CONNECT BOTTOM PLATE TO FOOTING WITH 13 NOM. A307 ANCHOR BOLTS, 130 MIN. EMBEDMENT, 500 MAX. SPACING ON CENTER.
4. PLACE FILTER FABRIC BETWEEN WALL AND BACKFILL.
5. WOOD MEMBERS ARE GIVEN IN NOMINAL METRIC DIMENSIONS.
6. ALL DIMENSIONS ARE GIVEN IN MILLIMETERS UNLESS OTHERWISE NOTED.
7. SEE S-1 FOR GENERAL STRUCTURAL NOTES.

GRAPHIC SCALES

1:25 500 250 0 500 1000

US Army Corps of Engineers

Symbol	Description	Date	Approved	Symbol	Description	Date	Approved

Designed by: REH
Dwn by: RLA
Ckd by: REH
Reviewed by: WAW
Submitted by: AF
Date: 01 APR 98
Rev.
Design file no.
Drawing code: STD 179-90-01
File name: STD516.DGN
Plot date: 20 MAR 98
Plot scale: FULL

U.S. ARMY ENGINEERING AND SUPPORT CENTER, HUNTSVILLE
HUNTSVILLE, ALABAMA

FORCE XXI/FORCE MODERNIZATION PROGRAM
STANDARD DESIGN

MACHINE GUN/OBSERVATION BUNKER

Sheet reference number:
S-16
Sheet of