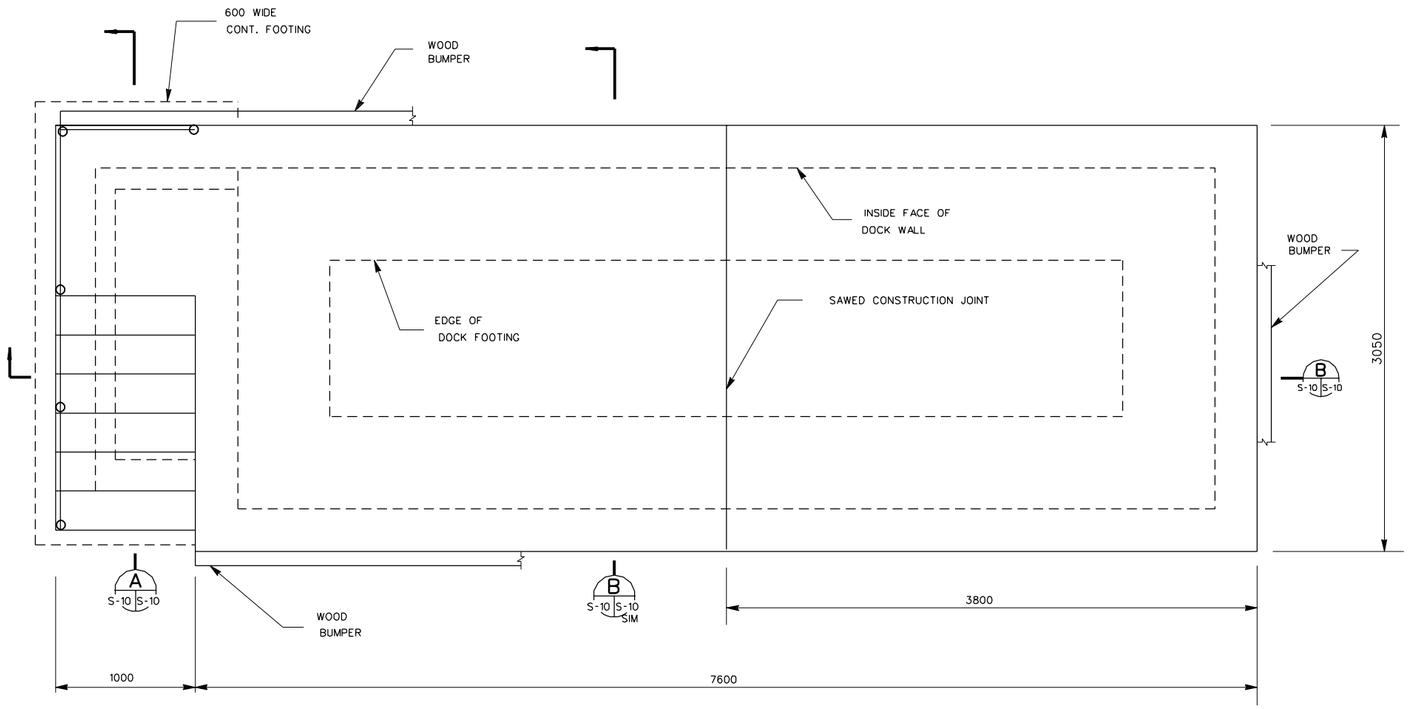

PLAN - AMMO LOADING DOCK

SCALE: 1:20

NOTES

1. ALL DIMENSIONS ARE IN MILLIMETERS UNLESS OTHERWISE NOTED.
2. SEE S-1 FOR GENERAL STRUCTURAL NOTES.

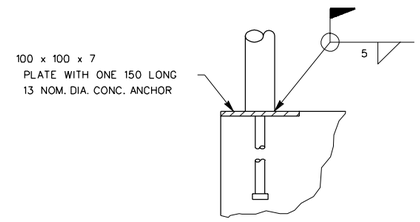

DETAIL 1 (S-10 S-10)

SCALE : N.T.S.

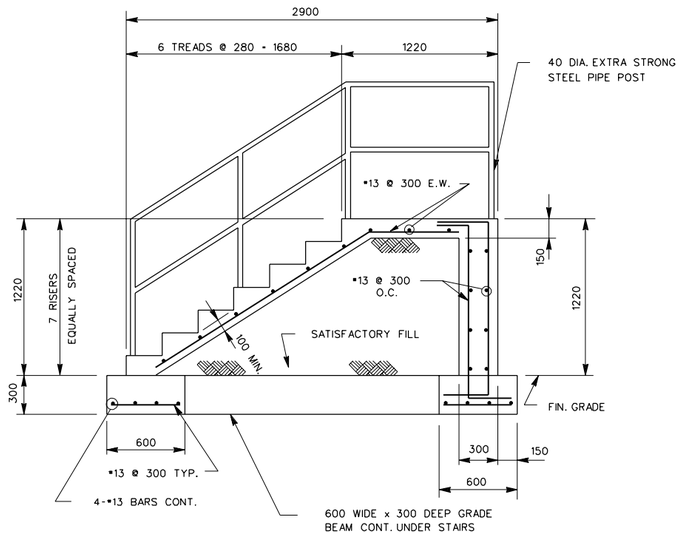

SECTION A (S-10 S-10)

SCALE : N.T.S.

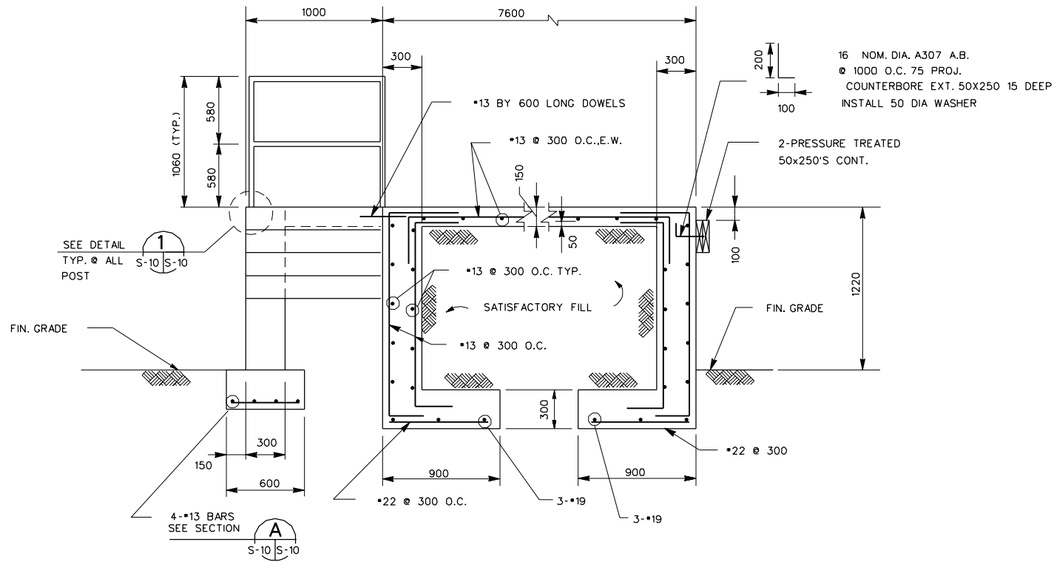

SECTION B (S-10 S-10)

SCALE : N.T.S.

GRAPHIC SCALES

1:20 400 200 0 400 800

US Army Corps of Engineers

Symbol	Description	Date	Approved	Symbol	Description	Date	Approved

Designed by: REH
Dwn by: RLA
Ckd by: REH
Reviewed by: WAW
Submitted by: AF
Date: 01 APR 98
Design file no.
Drawing code: STD 179-90-01
File name: STD510.DGN
Plot date: 20 MAR 98
Plot scale: FULL
Rev.

U.S. ARMY ENGINEERING AND SUPPORT CENTER, HUNTSVILLE
HUNTSVILLE, ALABAMA

FORCE XXI/FORCE MODERNIZATION PROGRAM
STANDARD DESIGN

AMMO LOADING DOCK

Sheet reference number: S-10

Sheet of