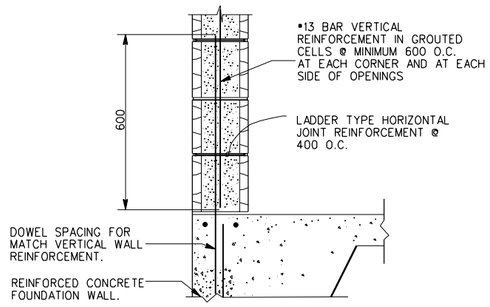

WALL AT BASE (1 / TYP. S-7)
SCALE : 1:10

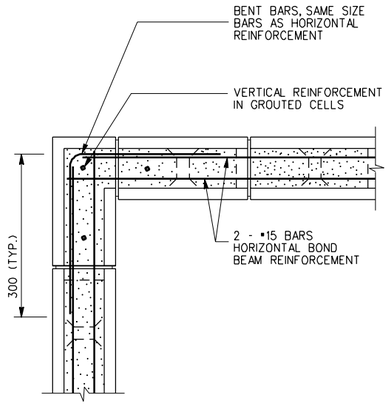

BOND BEAM CORNER (2 / TYP. S-7)
SCALE : 1:10

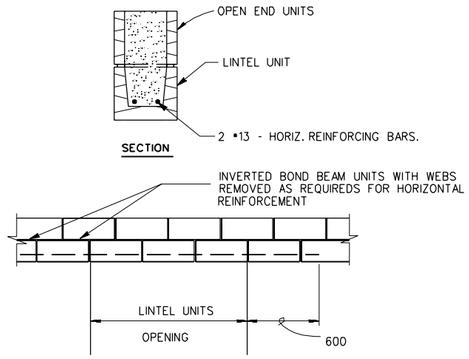

BOND BEAM (3 / TYP. S-7)
SCALE : 1:10

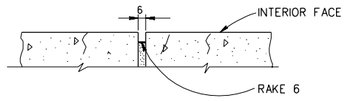

DETAIL (A / S-7 S-7)
SCALE : N.T.S.

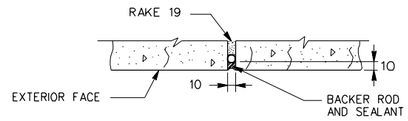

DETAIL (B / S-7 S-7)
SCALE : N.T.S.

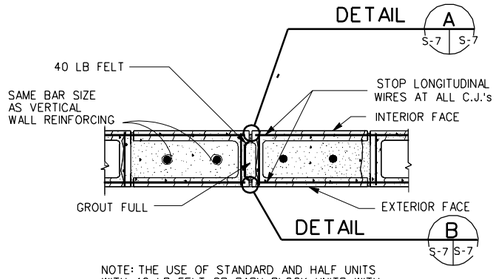

NOTE: THE USE OF STANDARD AND HALF UNITS WITH 40 LB FELT OR SASH BLOCK UNITS WITH KEY IS A CONTRACTORS OPTION.

CMU CONTROL JOINT (4 / TYP. S-7)
SCALE : 1:10

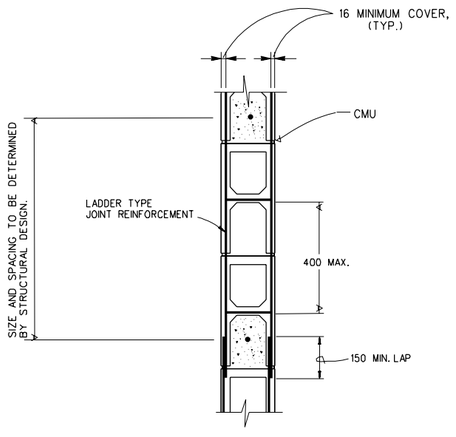

JOINT REINFORCEMENT (5 / TYP. S-7)
SCALE : 1:10

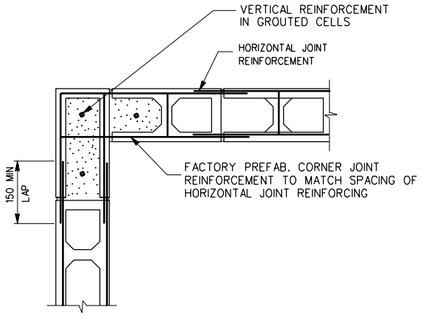

JOINT REINF. AT CORNER (6 / TYP. S-7)
SCALE : 1:10

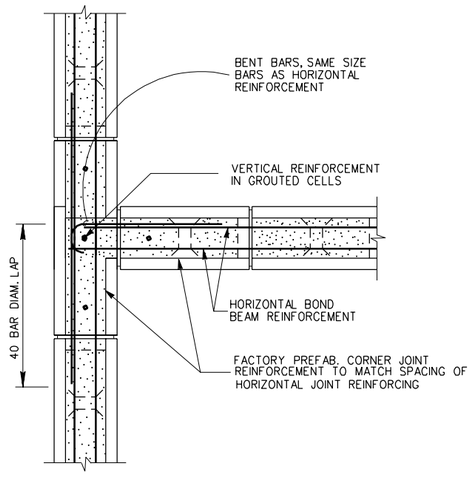

INTERIOR CORNER JOINT (7 / TYP. S-7)
SCALE : 1:10

NOTES

1. SEE FACILITY PLANS, ELEVATIONS AND SECTIONS FOR MASONRY DETAIL APPLICATIONS.
2. ALL VERTICAL REINFORCING THAT IS INTERRUPTED BY AN OPENING SHALL BE REPLACED WITH ADDITIONAL REINFORCEMENT EQUAL TO THAT INTERRUPTED. HALF SHALL BE PLACED ON EACH SIDE OF THE OPENING AND SHALL EXTEND THE ENTIRE HEIGHT OF THE WALL.
3. PROVIDE BOND BEAMS EXTENDING THE ENTIRE LENGTH OF THE WALL AT THE TOP AND MID-HEIGHT OF THE WALL. WHERE WINDOWS OCCUR, PLACE THE MID-HEIGHT BAND BEAM BELOW THE WINDOWS.
4. CONTINUE REINFORCING THROUGH BOND BEAM AT CONTROL JOINT
5. ALL MEASUREMENTS ARE IN MILLIMTERSS UNLESS OTHERWISE NOTED.
6. SEE S-1 FOR GENERAL STRUCTURAL NOTES.

GRAPHIC SCALE
1:10 — 200 100 0 200 400

US Army Corps of Engineers

Symbol	Description	Date	Approved	Symbol	Description	Date	Approved

Date: 01 APR 98 | Rev.
Design file no.
Designed by: REH | Ckd by: REH
Dwn by: RLA
Reviewed by: WAW
Submitted by: AF
Drawing code: STD 171-00-01
File name: STD507.DGN
Plot date: 20 MAR 98
Plot scale: FULL

U.S. ARMY ENGINEERING AND SUPPORT CENTER, HUNTSVILLE
HUNTSVILLE, ALABAMA

FORCE XXI/FORCE MODERNIZATION PROGRAM
STANDARD DESIGN
STANDARD MASONRY DETAILS

Sheet reference number:
S-07
Sheet of