NOTES:

1. ALL DIMENSIONS ARE IN MILLIMETERS UNLESS OTHERWISE NOTED.
2. SEE S-1 FOR GENERAL STRUCTURAL NOTES.

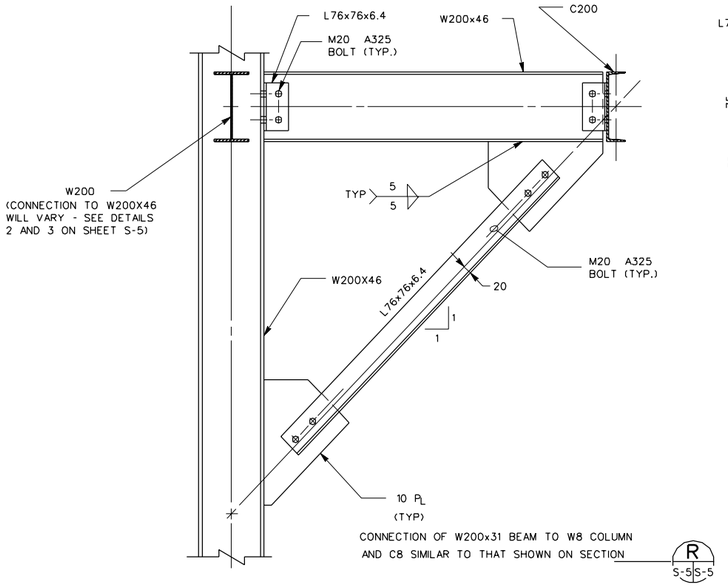


CONNECTION OF W200x31 BEAM TO W8 COLUMN AND C8 SIMILAR TO THAT SHOWN ON SECTION R S-5 S-5

SECTION S
N.T.S.
S-3 S-4 S-1 S-6

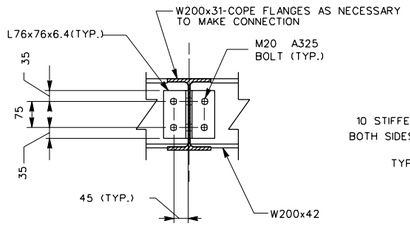


TYPICAL CONNECTION - L200x31 TO W200x42
N.T.S.

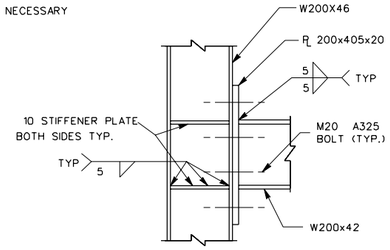


SECTION W
N.T.S.
S-5 S-6

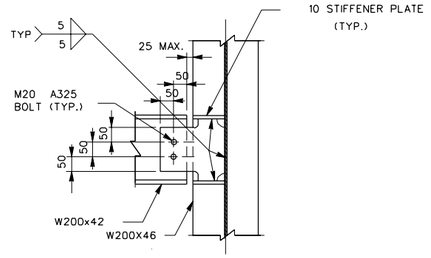


SECTION X
N.T.S.
S-5 S-6

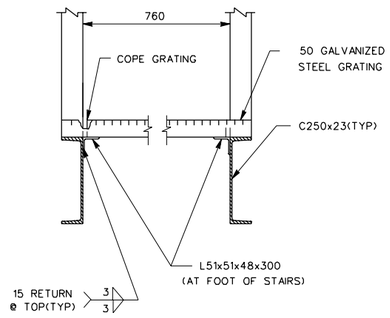


SECTION T
N.T.S.
S-4 S-3 S-6

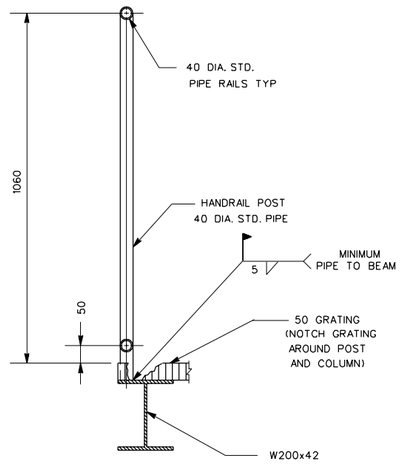


NOTE:STRETCH WIRE FABRIC BETWEEN RAILS AND POSTS SEE ARCHITECTURAL DRAWINGS.

SECTION AA
N.T.S.
S-1 S-6

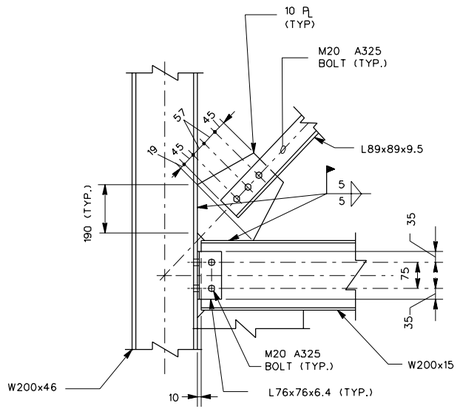


BEAM AND BRACE FRAME INTO WEB OF COLUMN WHEN APPLICABLE

DETAIL 4
N.T.S.
S-3 S-6 S-4

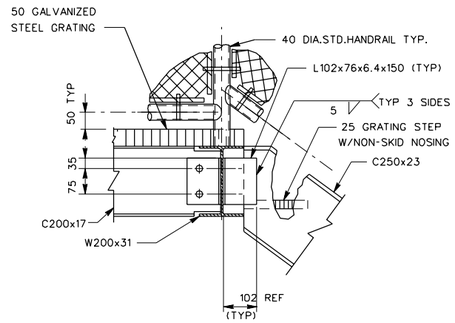


NOTE: HANDRAIL DETAILS SIMILAR TO THOSE SHOWN ON SECTION AA S-1 S-6

DETAIL 5
N.T.S.
S-3 S-6 S-4

US Army Corps of Engineers

| Symbol | Description | Date | Approved | Symbol | Description | Date | Approved |
|---|---|---|---|---|---|---|---|

Designed by: REH
Dwn by: RLA
Ckd by: REH
Reviewed by: WAM
Submitted by: AF
Date: 01 APR 98
Rev.
Design file no.
Drawing code: STD 179-71- 01
File name: STD506.DGN
Plot date: 20 MAR 98
Plot scale: FULL

U. S. ARMY ENGINEERING AND SUPPORT CENTER, HUNTSVILLE
HUNTSVILLE, ALABAMA

FORCE XXI/FORCE MODERNIZATION PROGRAM
STANDARD DESIGN

CONTROL TOWER (6 OF 6)
CONNECTIONS

Sheet reference number:
S-06
Sheet 6 of 6