NOTES:
1. ALL DIMENSIONS ARE IN MILLIMETERS UNLESS OTHERWISE NOTED.
2. SEE S-1 FOR GENERAL STRUCTURAL NOTES.

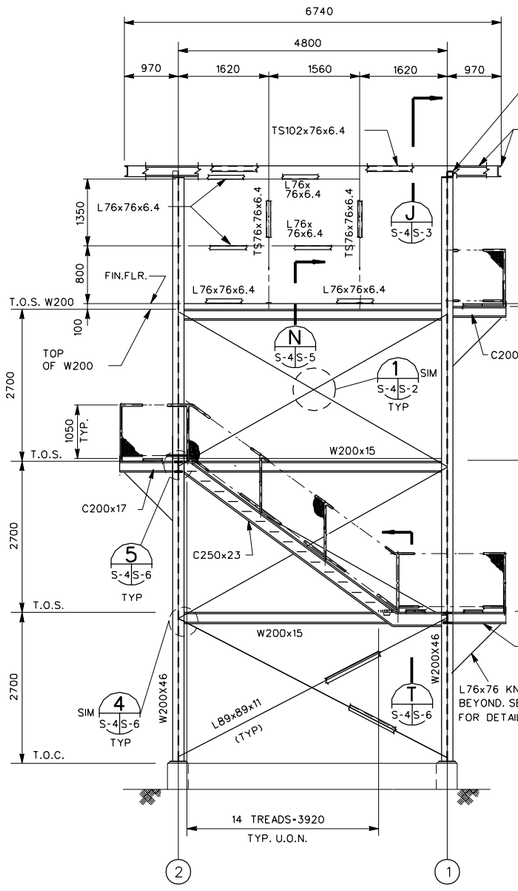

ELEVATION C S-1 S-4
N.T.S.

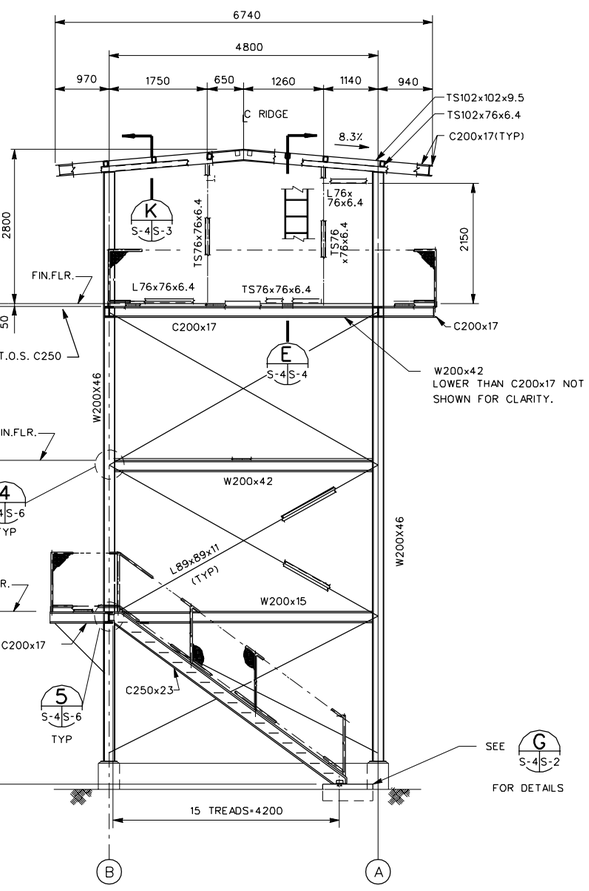

ELEVATION D S-1 S-4
N.T.S.

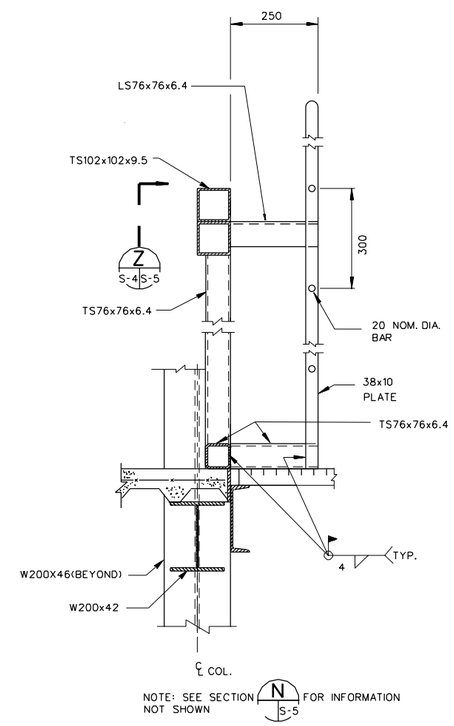

SECTION E S4 S4
N.T.S.

US Army Corps of Engineers

Symbol	Description	Date	Approved	Symbol	Description	Date	Approved

Designed by: REH
Dwn by: RLA
Ckd by: REH
Reviewed by: WAW
Submitted by: AF
Date: 01 APR 98
Rev.
Design file no.
Drawing code: STD 179-71-01
File name: STD504.DGN
Plot date: 20 MAR 98
Plot scale: FULL

U.S. ARMY ENGINEERING AND SUPPORT CENTER, HUNTSVILLE
HUNTSVILLE, ALABAMA

FORCE XXI/FORCE MODERNIZATION PROGRAM
STANDARD DESIGN

CONTROL TOWER (4 OF 6)
ELEVATIONS

Sheet reference number:
S-04
Sheet 4 of 6