NOTES:

1. ALL DIMENSIONS ARE IN MILLIMETERS UNLESS OTHERWISE NOTED.
2. SEE S-1 FOR GENERAL STRUCTURAL NOTES.

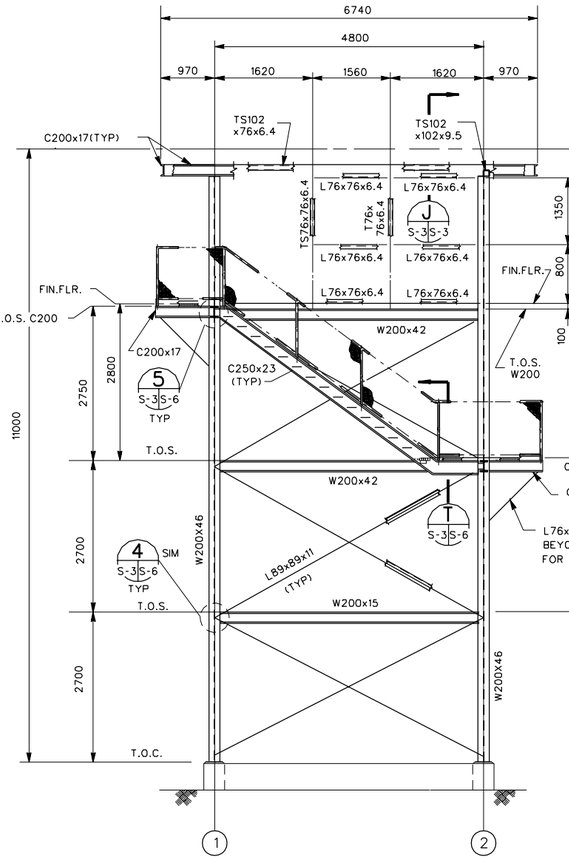


ELEVATION A
SCALE : N.T.S.
S-1 S-3

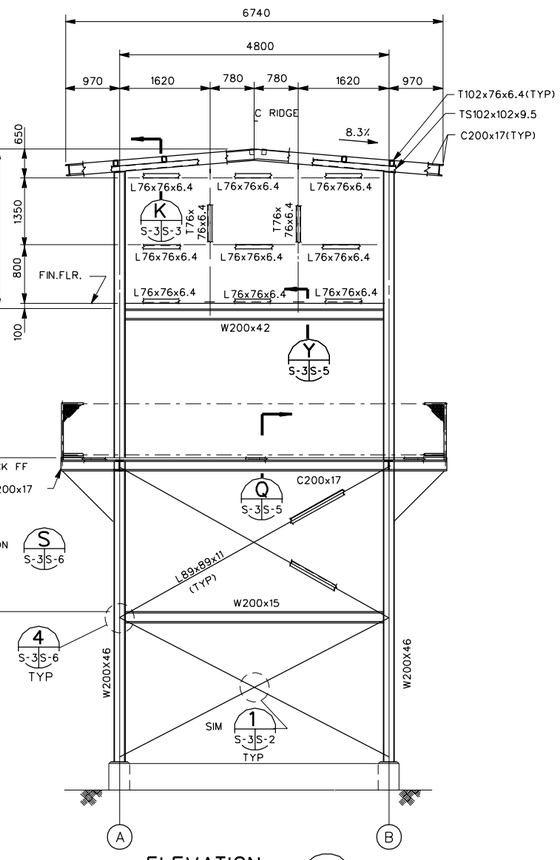


ELEVATION B
SCALE : N.T.S.
S-1 S-3

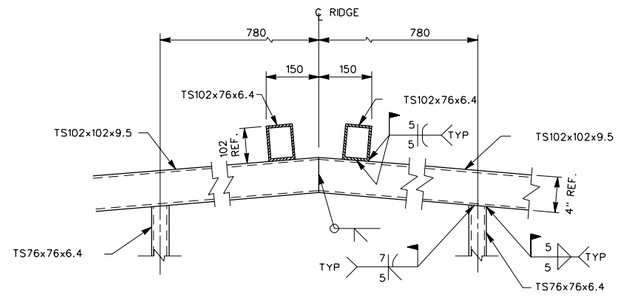


SECTION H
SCALE : N.T.S.
S-1 S-3

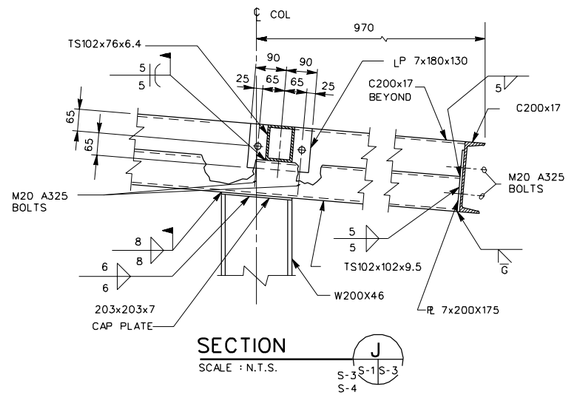


SECTION J
SCALE : N.T.S.
S-1 S-3
S-3
S-4

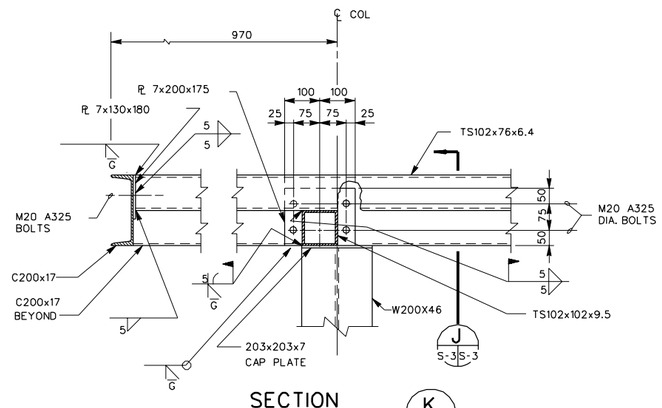


SECTION K
SCALE : N.T.S.
S-1 S-3
S-3
S-4

US Army Corps of Engineers

| Symbol | Description | Symbol | Description | Date | Approved |
|---|---|---|---|---|---|

Designed by: REH
Dwn by: RLA
Ckd by: REH
Reviewed by: WAW
Submitted by: AF
Date: 01 APR 98
Rev.
Design file no.
Drawing code: STD 171-71-01
File name: STD53J.DGN
Plot date: 20 MAR 98
Plot scale: FULL

U.S. ARMY ENGINEERING AND SUPPORT CENTER, HUNTSVILLE
HUNTSVILLE, ALABAMA

FORCE XXI/FORCE MODERNIZATION PROGRAM
STANDARD DESIGN

CONTROL TOWER (3 OF 6)
ELEVATIONS

Sheet reference number:
S-03
Sheet 3 of 6