NOTES:

1. LOUVER ASSEMBLIES TO BE ASSEMBLED AT LOUVER MANUFACTURER FACTORY.
2. CLIP ANGLES AND EXTENDED SILL TO BE PROVIDED BY LOUVER MANUFACTURER.
3. INSTALLATION OF LOUVER TO BE IN ACCORDANCE WITH LOUVER MANUFACTURER'S RECOMMENDATIONS.

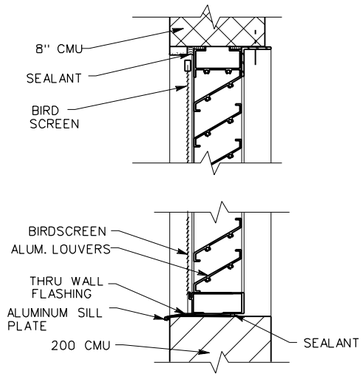

LOUVER DETAIL 1 (M-06/M-07)

NOT TO SCALE

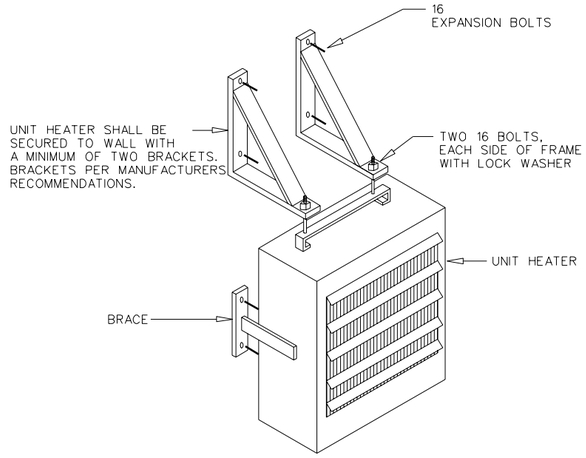

ELECTRIC UNIT HEATER DETAIL 2 (M-06/M-07)

NOT TO SCALE

GENERAL NOTES:

1. GENERAL CONTRACTOR SHALL PROVIDE BUILDING STRUCTURAL FRAMING ON ALL SIDES
2. CAULK UNDER FLANGE AND ALL AROUND FOR A WEATHERPROOF SEAL

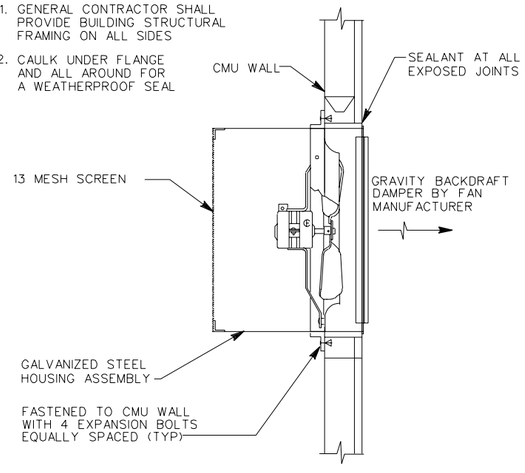

NOTE: SEE SHEET A-7 FOR EXHAUST FAN LOCATION AND MOUNTING HEIGHT

WALL MOUNTED EXHAUST FAN DETAIL 3 (M-06/M-07)

NOT TO SCALE

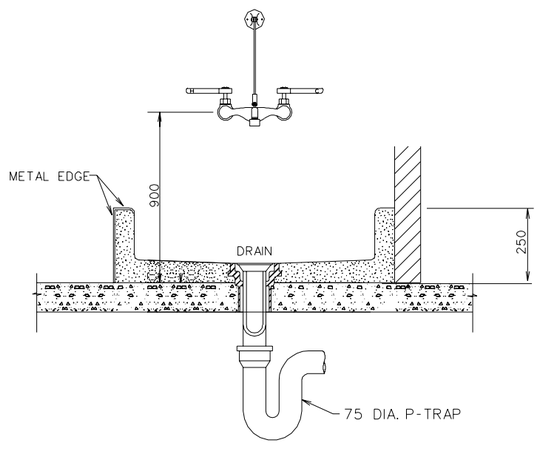

MOP SINK DETAIL 4 (M-06/M-07)

NOT TO SCALE

ELECTRIC UNIT HEATER SCHEDULE

UNIT NO.	LOC	L/s	ENT AIR TEMP C	TYPE	MTG HEIGHT	KW RATING	MOTOR HP	MOTOR VOLTAGE	MOTOR PHASE	REMARKS
EUH-1	ROOM 101			HORIZ						FREEZE PROTECTION FOR MEN'S ROOM
EUH-2	ROOM 102			HORIZ						FREEZE PROTECTION FOR WOMEN'S ROOM
EUH-3	ROOM 103			HORIZ						FREEZE PROTECTION FOR STORAGE ROOM

NOTE 1. HEIGHT MEASURED IN FEET FROM BOTTOM OF UNIT TO FINISHED FLOOR.
NOTE 2. MANUFACTURER TO PROVIDE BRACKET.

EXHAUST FAN SCHEDULE

UNIT NO.	TYPE	QUANTITY	L/s	M/s	EXTERIOR STATIC PRESSURE (CM W.G.)	MOTOR HP	MOTOR VOLTS	MOTOR PHASE	REMARK
EF-1	DIRECT DRIVE WALL VENTILATOR	2							FIELD SERVICE HEAD STORAGE/WOMEN'S ROOM
EF-2	DIRECT DRIVE WALL VENTILATOR	1							FIELD SERVICE HEAD MEN'S ROOM AND

LOUVER SCHEDULE

MARK	SERVICE	W x H (mm)	L/s	QTY	PRESSURE DIFFERENTIAL (CM W. G.)	LOCATION	MTG HEIGHT	REMARKS
LVR-1	INTAKE			1		RM 101		
LVR-2	INTAKE			1		RM 102		
LVR-3	INTAKE			1		RM 103		

REGISTER & GRILLE SCHEDULE

MARK	SERVICE	SIZE (mm)	L/s	QTY	STATIC PRESSURE (CM W. G.)	TYPE	REMARKS
SAR-1	CONTROL TOWER			1			NOTE 1
SAR-2	INSTRC RM 101			1		DEFLECTION	
RAG-1	CONTROL TOWER			1			NOTE 1
RAG-2	INSTRC RM 101			1		DEFLECTION	

NOTE 1. SUPPLY REGISTER AND RETURN GRILLE TO BE FURNISHED WITH UNIT.

PLUMBING FIXTURE SCHEDULE

MARK	DESCRIPTION	MIN CONNECTIONS (IN) WASTE	VENT	CW	HW	REMARKS
P-1	WATER CLOSET	100	64	25	-	
P-2	URNIAL	100	50	19	-	
P-3	LAVATORY	50	50	10	-	
P-4	MOP SINK	75	50	13	-	
P-5	FREEZE PROOF WALL HYDRANT	50	50	13	-	

US Army Corps of Engineers

Symbol	Description	Date	Approved	Symbol	Description	Date	Approved

Designed by: CWL
Dwn by: CWL
Ckd by: CWL
Reviewed by: NWR
Submitted by: SJP
Date: 01 APR 98
Rev.
Design file no.
Drawing code: STD 171-24-01
File name: STD407.DGN
Plot date: 20 JUNE 98
Plot scale: FULL

U.S. ARMY ENGINEERING AND SUPPORT CENTER, HUNTSVILLE
HUNTSVILLE, ALABAMA

FORCE XXI/FORCE MODERNIZATION PROGRAM
STANDARD DESIGN

LATRINE WITH WATER CLOSETS

Sheet reference number:
M-07
Sheet of