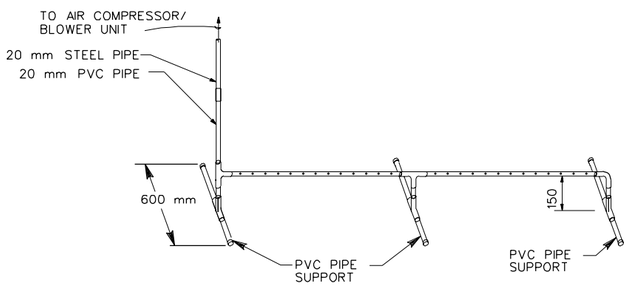

AERATION SYSTEM PIPING

NOT TO SCALE — RISER DIAGRAM

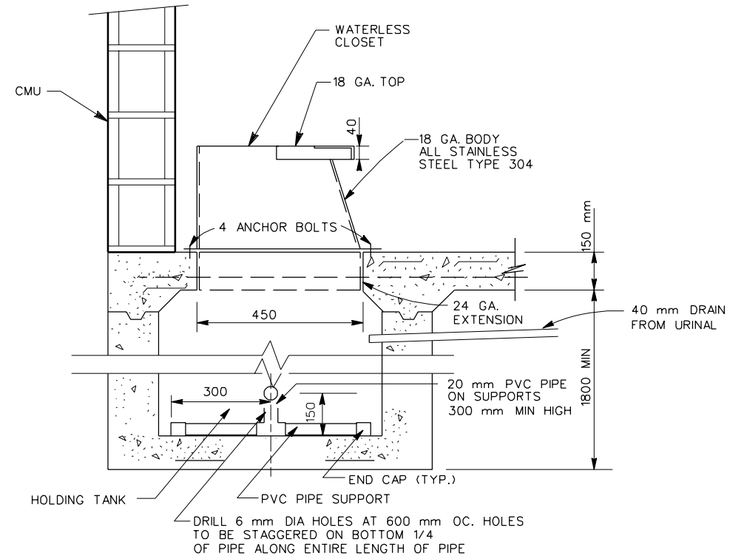

SECTION D

M-04M-05

NOT TO SCALE

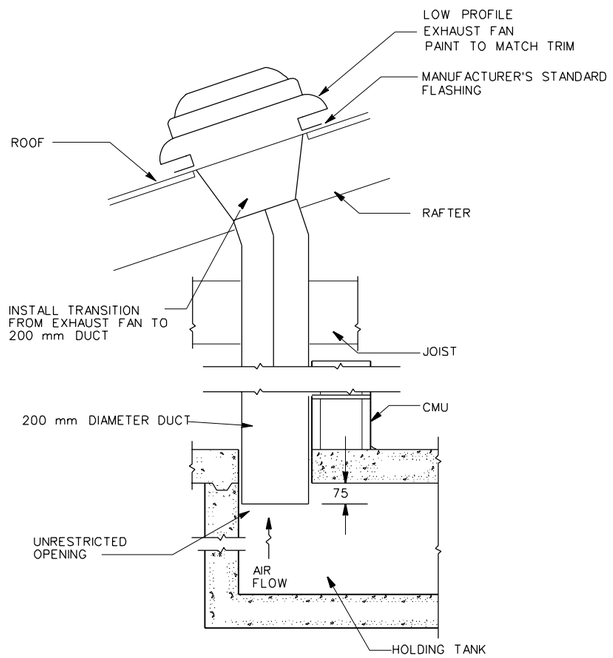

EXHAUST FAN DETAIL 1

M-04M-05

NOT TO SCALE

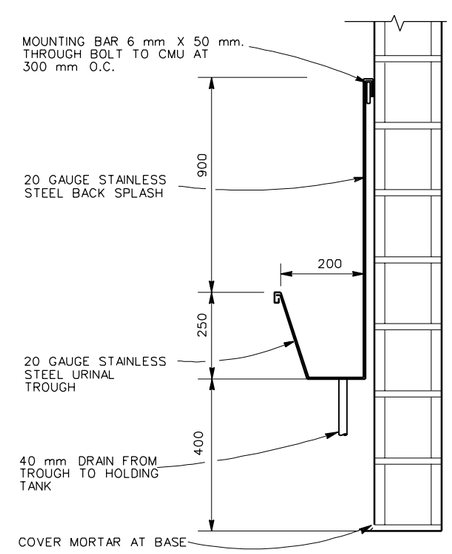

SECTION C

M-04M-05

NOT TO SCALE

US Army Corps of Engineers

Symbol	Description	Date	Approved	Symbol	Description	Date	Approved

Designed by: CWL
Dwn by: CWL
Ckd by: CWL
Reviewed by: NWR
Submitted by: SJP
Date: 01 APR 98
Rev.
Design file no.
Drawing code: STD 171-24-01
File name: STDM05.DGN
Revision: 20 MAR 98
Plot scale: FULL

U. S. ARMY ENGINEERING AND SUPPORT CENTER, HUNTSVILLE
HUNTSVILLE, ALABAMA

FORCE XXI/FORCE MODERNIZATION PROGRAM
STANDARD DESIGN

AERATED VAULT LATRINE

Sheet reference number:
M-05
Sheet of