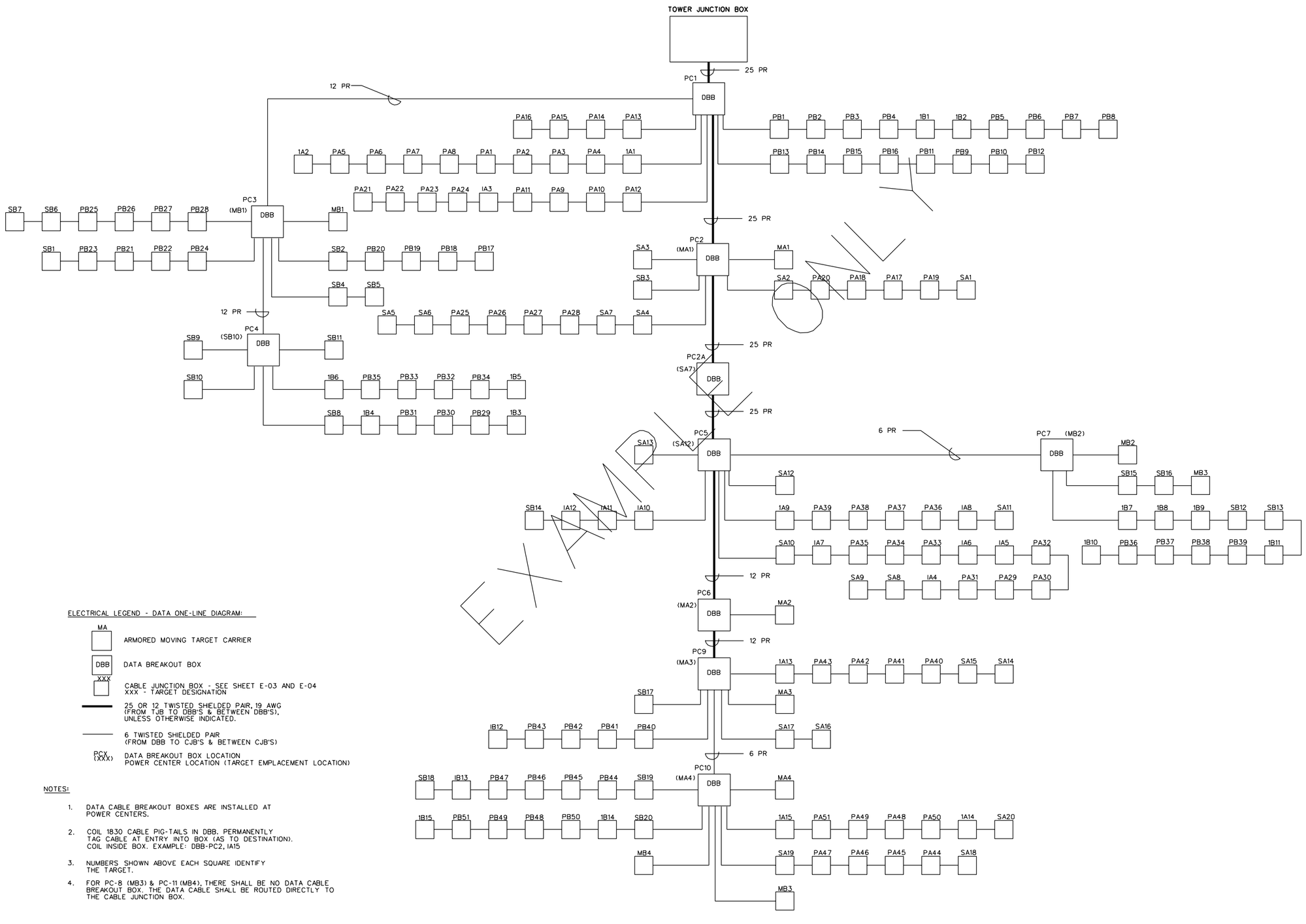

ELECTRICAL LEGEND - DATA ONE-LINE DIAGRAM:

- MA — ARMORED MOVING TARGET CARRIER
- DBB — DATA BREAKOUT BOX
- XXX — CABLE JUNCTION BOX - SEE SHEET E-03 AND E-04; XXX - TARGET DESIGNATION
- 25 OR 12 TWISTED SHIELDED PAIR, 19 AWG (FROM TJB TO DBB'S & BETWEEN DBB'S), UNLESS OTHERWISE INDICATED.
- 6 TWISTED SHIELDED PAIR (FROM DBB TO CJB'S & BETWEEN CJB'S)
- PCX (XXX) — DATA BREAKOUT BOX LOCATION; POWER CENTER LOCATION (TARGET EMPLACEMENT LOCATION)

NOTES:

1. DATA CABLE BREAKOUT BOXES ARE INSTALLED AT POWER CENTERS.
2. COIL 1830 CABLE PIG-TAILS IN DBB. PERMANENTLY TAG CABLE AT ENTRY INTO BOX (AS TO DESTINATION). COIL INSIDE BOX. EXAMPLE: DBB-PC2, IA15
3. NUMBERS SHOWN ABOVE EACH SQUARE IDENTIFY THE TARGET.
4. FOR PC-8 (MB3) & PC-11 (MB4), THERE SHALL BE NO DATA CABLE BREAKOUT BOX. THE DATA CABLE SHALL BE ROUTED DIRECTLY TO THE CABLE JUNCTION BOX.

DATA SINGLE DIAGRAM

N.T.S.

US Army Corps of Engineers

Symbol	Description	Date	Approved	Symbol	Description	Date	Approved

Designed by: N/A
Dwn by: JTP
Ckd by: MLR
Reviewed by: WLS
Submitted by: RNM
Date: 01 APR 98
Rev.
Design file no.
Drawing code: STD 179-00-01
File name: STDE23.DGN
Plot date: 20 MAR 98
Plot scale: FULL

U.S. ARMY ENGINEERING AND SUPPORT CENTER, HUNTSVILLE
HUNTSVILLE, ALABAMA

FORCE XXI/FORCE MODERNIZATION PROGRAM
STANDARD DESIGN

ARMOR RANGE EXAMPLE DATA
SINGLE LINE DIAGRAM

Sheet reference number:
E-23