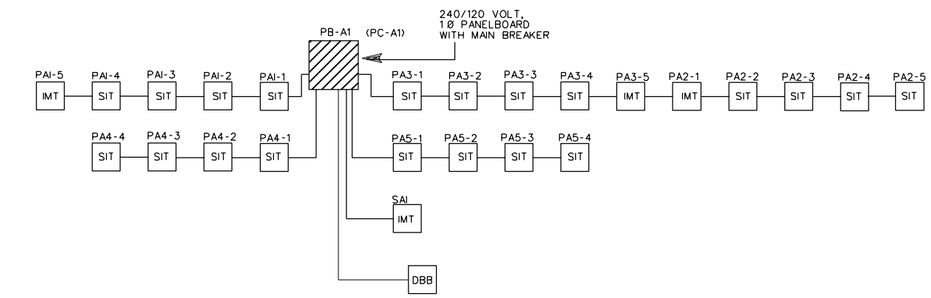

PB-A1
N.T.S.

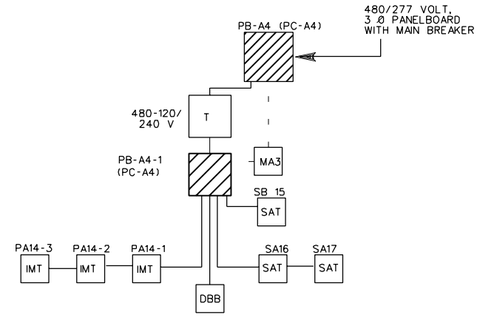

PB-A4
N.T.S.

ELECTRICAL LEGEND - SECONDARY ONE-LINE DIAGRAM:

- DBB — DATA BREAKOUT BOX
- PB-XX (PC-XX, XXX) — PANELBOARD (POWER CENTER & PHYSICAL LOCATION SHOWN IN PARENTHESIS)
- TARGET
- MAX — ARMORED MOVING TARGET CARRIER NUMBER AS SHOWN
- — — — INSTALLATION BY OTHERS NOT IN THIS CONTRACT
- ——— INSTALLATION BY CONSTRUCTION CONTRACTOR
- T — COMBINATION TRANSFORMER-PANELBOARD (MINI-POWER PANEL)
- T — DRY TYPE TRANSFORMER

NOTES:

1. NUMBERS AND LETTERS SHOWN ABOVE EACH SQUARE IDENTIFY THE TARGET.

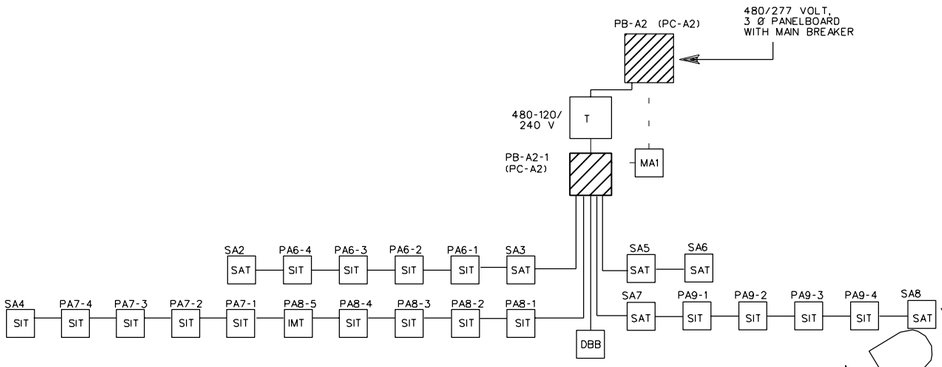

PB-A2
N.T.S.

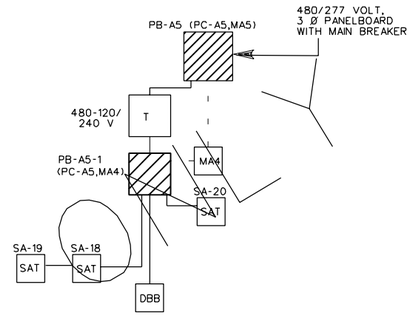

PB-A5
N.T.S.

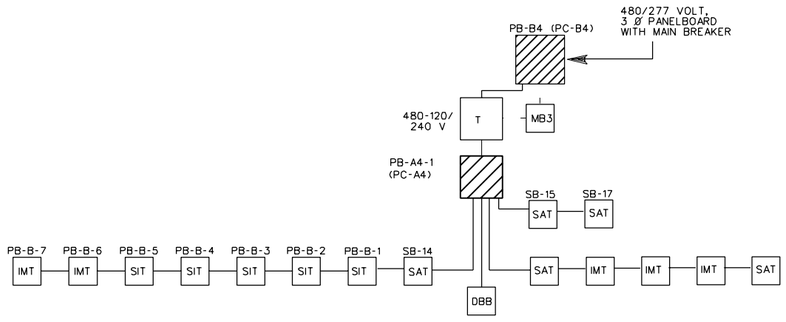

PB-B4
N.T.S.

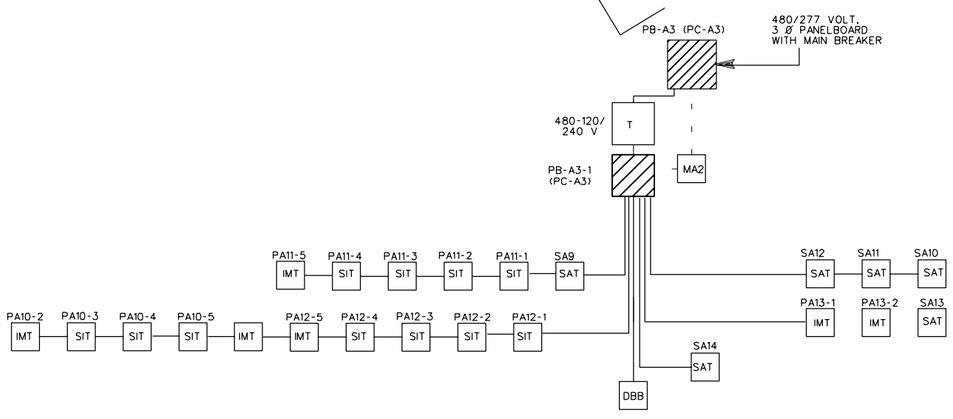

PB-A3
N.T.S.

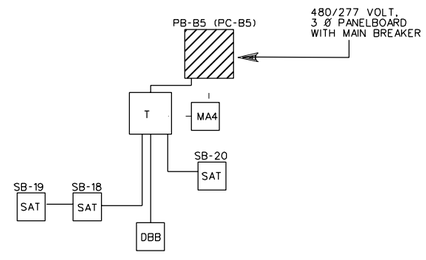

PB-B5
N.T.S.

EXAMPLE ONLY

US Army Corps of Engineers

Symbol	Description	Date	Approved	Symbol	Description	Date	Approved

Designed by: N/A
Dwn by: JTP
Ckd by: MLR
Reviewed by: WLS
Submitted by: RNM
Date: 01 APR 98
Rev.
Design file no.
Drawing code: STD 179-00-01
File name: STDE22.DGN
Plot date: 20 MAR 98
Plot scale: FULL

U.S. ARMY ENGINEERING AND SUPPORT CENTER, HUNTSVILLE
HUNTSVILLE, ALABAMA

FORCE XXI/FORCE MODERNIZATION PROGRAM
STANDARD DESIGN
TYP. ARMOR

ARMOR RANGE EXAMPLE SECONDARY POWER SINGLE LINE DIAGRAM

Sheet reference number:
E-22