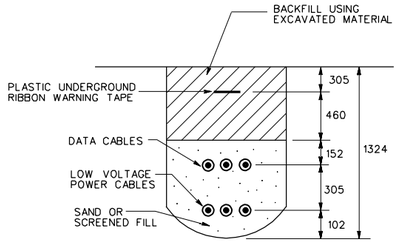


## LOW VOLTAGE POWER & DATA CABLE IN THE SAME TRENCH (1 / E-X E-09)

N.T.S.

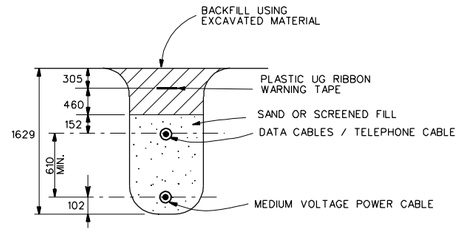


## MEDIUM & LOW VOLTAGE POWER CABLES & DATA CABLES IN THE SAME TRENCH (2 / E-X E-09)

N.T.S.

NOTES:

1. THE CONTRACTOR MAY ELECT TO INSTALL CONDUCTORS IN SEPARATE, PARALLEL TRENCHES AS LONG AS SEPARATION, MINIMUM DEPTH, AND MINIMUM COVER CRITERIA ARE MET. PLOWING IN OF CABLES IS NOT ACCEPTABLE.
2. DETAILS SHOW TYPICAL CONFIGURATIONS. FOR VARIANCE, SPACE ACCORDING TO NFPA 70.

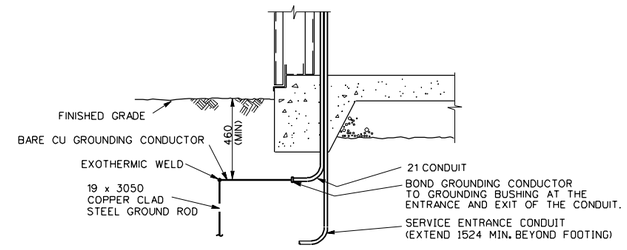


## ELECTRICAL SERVICE ENTRANCE AND GROUNDING DETAIL - UNDERGROUND (4 / E-14 E-09, E-15, E-16)

N. T. S.

(CONTROL TOWER, LATRINES, OPERATIONS/STORAGE BLDG., AMMO-BREAKDOWN BLDG.)

NOTES:

1. POWER AND TELEPHONE CABLE, 100 PVC CONDUIT. TOP OF CONCRETE TO BE 762 BELOW GRADE.
2. DETAILS SHOW TYPICAL CONFIGURATIONS. FOR VARIANCE, SPACE ACCORDING TO NFPA 70.

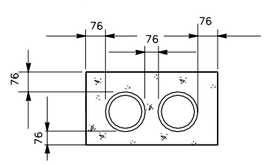


## PRIMARY POWER & TELEPHONE CABLE IN CONCRETE ENCASED DUCT BANK (3 / E-X E-09)

N.T.S.

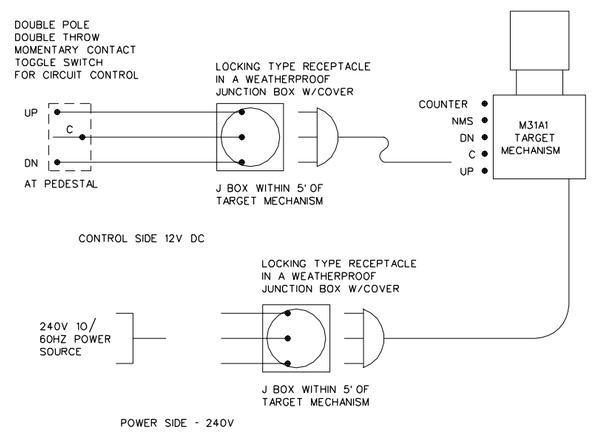


## TYPICAL SCHEMATIC FOR ONE TARGET

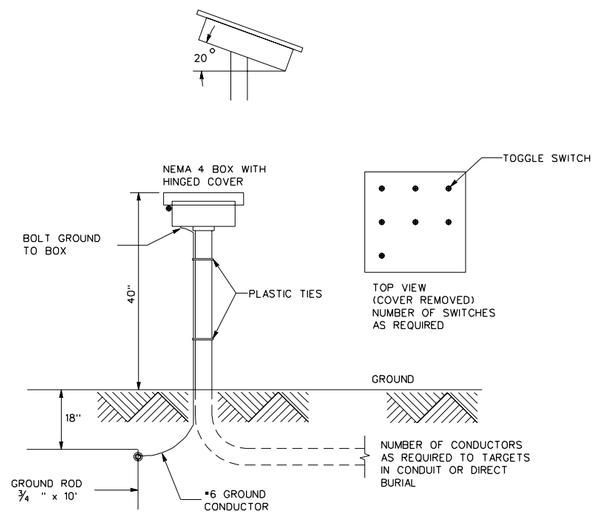


## OBSERVER STATION PEDESTAL DETAIL TYPICAL

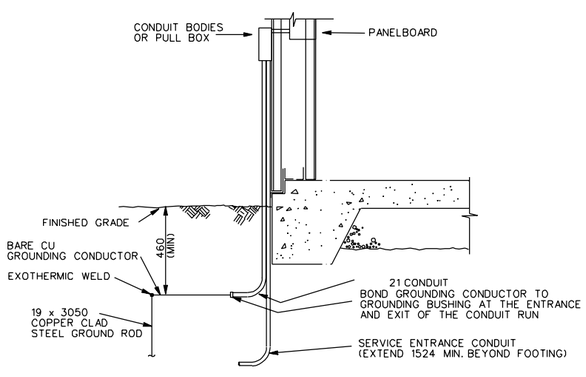


## GENERAL INSTRUICTION BUILDING ELECTRICAL SERVICE ENTRANCE AND GROUNDING DETAIL - UNDERGROUND (5 / E-14 E-09)

N. T. S.

NOTES TO DESIGNER:

1. THE ELECTRICAL DISTRIBUTION SYSTEM SHALL BE UNDERGROUND IN CONDUIT OR DIRECT BURIAL.
2. POWER REQUIREMENTS - 240V 1Ø 60HZ. LOAD OF APPROXIMATELY 1.5 AMPERES PER TARGET MECHANISM.
3. CONDUCTORS SHALL BE PROVIDED WITH A 85% SHIELD AND GROUNDED AT EACH TERMINATING POINT.
4. PROVIDE A PEDESTAL AND NEMA 4 BOX WITH CORRESPONDING SWITCHES AND TERMINAL BOARDS AT EACH OBSERVER POINT.
5. REFER TO ARCHITECTURAL DRAWINGS FOR PLACEMENT OF TARGET EQUIPMENT.
6. PROVIDE AT EACH TARGET EMPLACEMENT POWER AND CONTROL RECEPTACLES. DIFFERENT TYPES OF LOCKING RECEPTACLES SHOULD BE SPECIFIED FOR 12V DC CONTROL SYSTEM AND FOR 240V AC POWER SYSTEM.
7. ALL WORK SHALL BE IN ACCORDANCE WITH NFPA 70 AND ANSI C2.

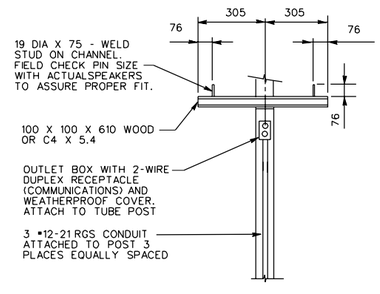


## SPEAKER MOUNTING BRACKET PARTIAL ELEVATION (A / E-09 E-09)

N.T.S.

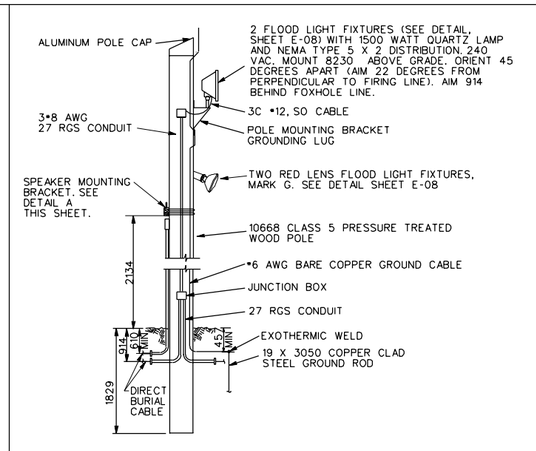


## FLOODLIGHT POLE DETAIL (6 / E-X E-09)

N.T.S.

US Army Corps of Engineers

| Symbol | Description | Date | Approved | Symbol | Description | Date | Approved |
|---|---|---|---|---|---|---|---|
| | | | | | | | |

Designed by: N/A
Date: 01 APR 98
Rev.
Dwn by: JTP
Ckd by: MLR
Design file no.
Reviewed by: WLS
Drawing code: STD 179-00-01
Submitted by: RNM
File name: STD09.DGN
Project no. 01-148-88
Plot scale: FULL

U.S. ARMY ENGINEERING AND SUPPORT CENTER, HUNTSVILLE
HUNTSVILLE, ALABAMA

FORCE XXI/FORCE MODERNIZATION PROGRAM
STANDARD DESIGN

MISCELLANEOUS ELECTRICAL DETAILS

Sheet reference number: E-09

Sheet of