GENERAL NOTES:

1. CONCRETE SHALL DEVELOP A MINIMUM COMPRESSIVE STRENGTH OF 28 MPa IN 28 DAYS.
2. AREAS DISTURBED BY CONSTRUCTION ACTIVITIES SHALL BE REVEGETATED OR RESURFACED CONSISTENT WITH THE NATURAL SURROUNDINGS. GROUND COVER SHALL NOT REDUCE TRENCH VISIBILITY.
3. TRENCHES CONSTRUCTED ON STANDARD TRAINING RANGES SHALL NOT BE USED FOR LIVE GRENADE TRAINING.
4. WALLS SHALL BE CONSTRUCTED OF TREATED TIMBERS. FILTER FABRIC SHALL BE INSTALLED BEHIND ALL WOOD WALLS BELOW GRADE. FABRIC SHALL EXTEND THE FULL HEIGHT OF THE WALL.
5. ALL DIMENSIONS ARE mm UNLESS OTHERWISE INDICATED.
6. SEE SHEET S-15 FOR STRUCTURAL DETAILS.

NOTES TO DESIGNER:

1. A SUBDRAIN SYSTEM SHALL BE PROVIDED TO ENSURE ADEQUATE DRAINAGE OF TRENCH.
2. THE NEED FOR FILTER FABRIC SHOULD BE EVALUATED AS PART OF THE SITE ADAPTION PROCESS. A FILTER LAYER MAY OR MAY NOT BE REQUIRED DEPENDING UPON THE SOIL TYPE AT A PARTICULAR SITE.
3. THIS GENERIC DESIGN FOR THE TRENCH MUST BE SITE ADAPTED TO SPECIFIC SITE CONDITIONS DETERMINED BY A SUBSURFACE INVESTIGATION AND A TOPOGRAPHIC SURVEY.
4. DEPTH OF FOOTING WILL VARY DEPENDING UPON SUBSURFACE INVESTIGATION AND COMPACTION REQUIREMENTS DURING CONSTRUCTION.
5. REFER TO THE BERM THICKNESS FIGURES LOCATED IN THE DESIGN MANUAL TO DETERMINE THE REQUIRED BERM THICKNESS.
6. BERM SLOPES SHOWN AS 3:1 ARE MAXIMUM. FLATTER SLOPES MAY BE REQUIRED BY SITE SPECIFIC GEOTECHNICAL REPORT.
7. ACTUAL LAYOUT MAY VARY PER TRAINING REQUIREMENT AND SITE CONDITIONS.

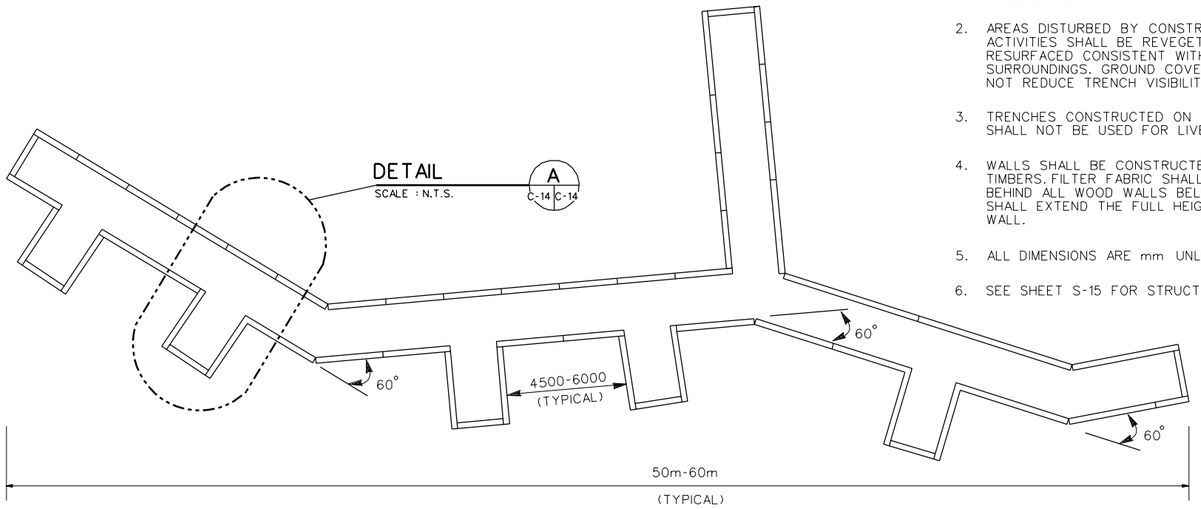

PLAN
NOT TO SCALE

TRENCH

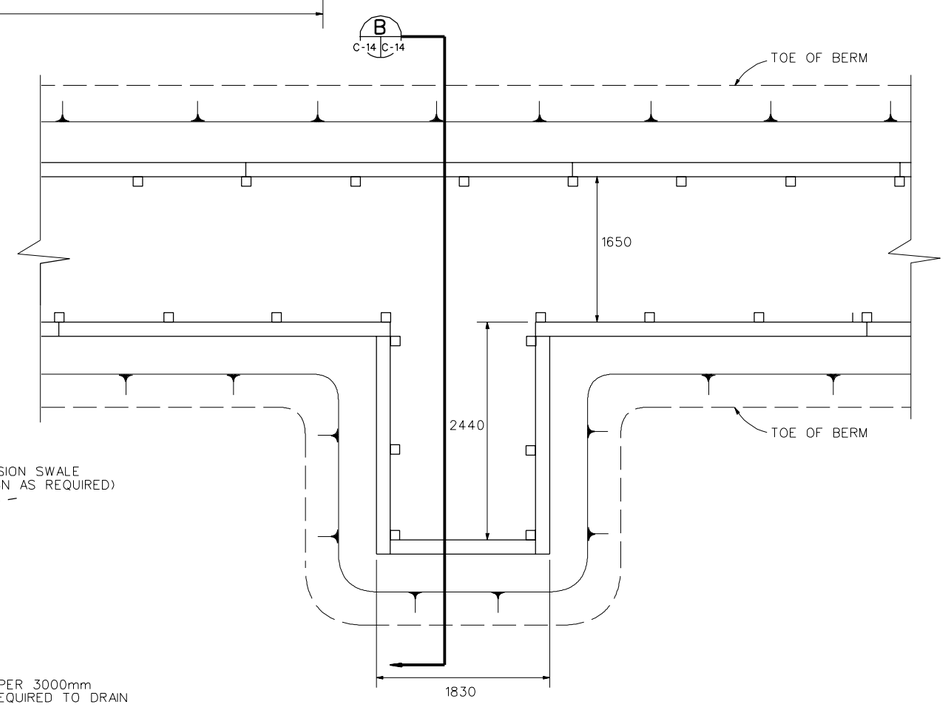

DETAIL
SCALE : N.T.S.
A
C-14 C-14

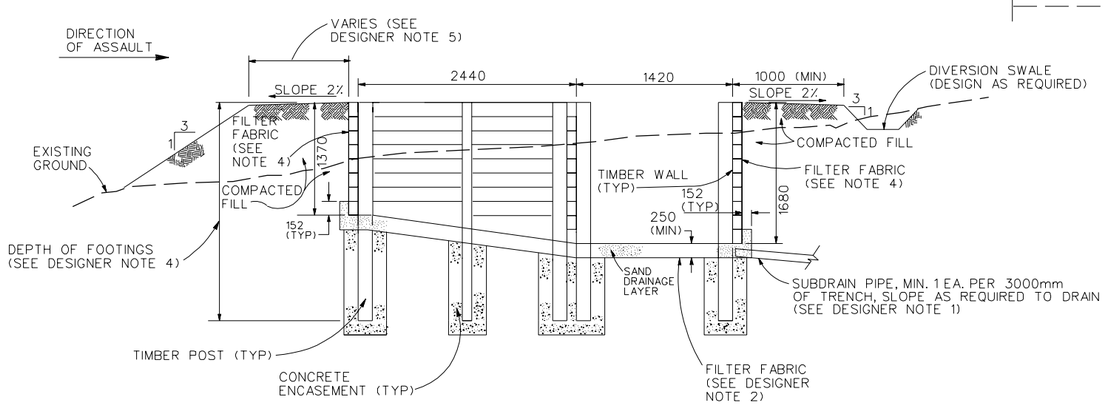

SECTION
SCALE : N.T.S.
B
C-14 C-14

US Army Corps of Engineers

Symbol	Description	Date	Approved	Symbol	Description	Date	Approved

Designed by: N/A
Dwn by: DFH
Ckd by: CGG
Reviewed by: CGG
Submitted by: REB
Date: 01 APR 98
Rev.
Design file no.
Drawing code: STD 179-00-01
File name STDCI4.DGN
Revision 20 MAR 98
Plot scale: FULL

U. S. ARMY ENGINEERING AND SUPPORT CENTER, HUNTSVILLE
HUNTSVILLE, ALABAMA

FORCE XXI/FORCE MODERNIZATION PROGRAM
STANDARD DESIGN

TRENCH

Sheet reference number:
C -14
Sheet of