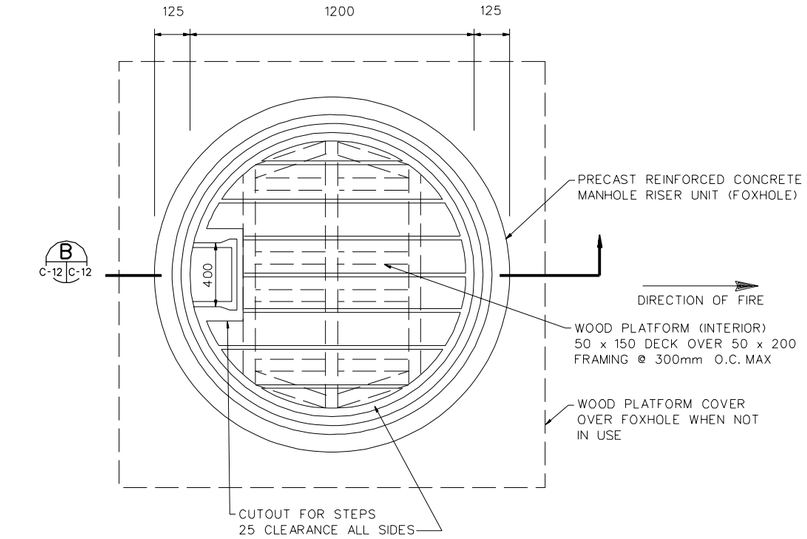

ONE MAN FOXHOLE PLAN

SCALE: N.T.S.

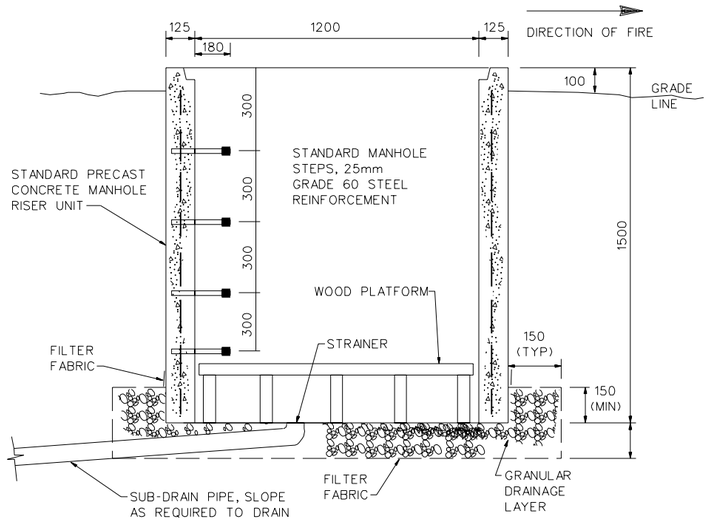

SECTION B

SCALE : N.T.S.

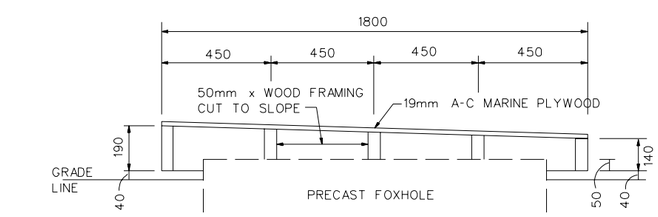

SECTION A

SCALE : N.T.S.

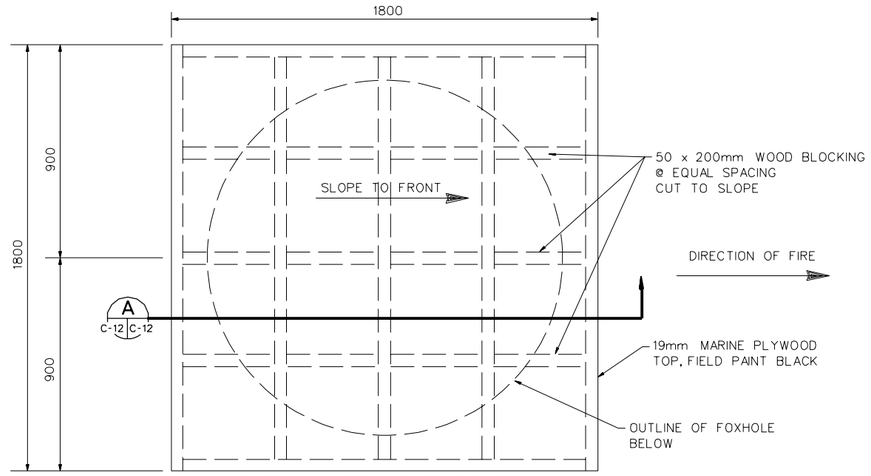

ONE MAN FOXHOLE COVER

SCALE: N.T.S.

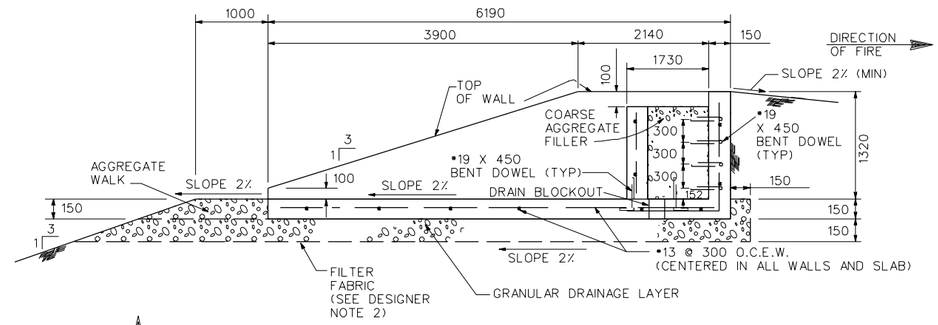

SECTION C

SCALE : N.T.S.

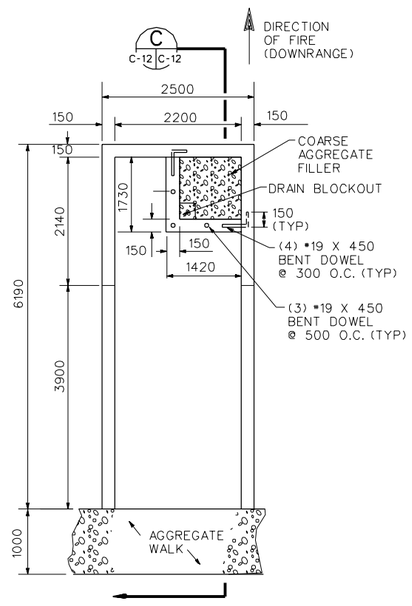

WALK-IN FOXHOLE PLAN

SCALE: N.T.S.

GENERAL NOTES:

1. CONCRETE SHALL DEVELOP A MINIMUM COMPRESSIVE STRENGTH OF 28 MPa IN 28 DAYS.
2. FOXHOLES SHALL BE CONSTRUCTED OF REINFORCED CONCRETE: CONCRETE STRUCTURES SHALL BE PRE-CAST OR CAST-IN-PLACE.
3. ALL REINFORCING STEEL SHALL BE PER ASTM A615, GRADE 60.
4. AREAS DISTURBED BY CONSTRUCTION ACTIVITIES SHALL BE REVEGETATED OR RESURFACED CONSISTENT WITH THE NATURAL SURROUNDINGS. GROUND COVER SHALL NOT REDUCE TARGET VISIBILITY.
5. ALL WOOD FRAMING SHALL BE CEDAR. ALL WOOD CONNECTIONS SHALL BE MADE WITH HOT-DIPPED GALVANIZED NAILS.
6. ALL DIMENSIONS ARE mm UNLESS OTHERWISE INDICATED

NOTES TO DESIGNER:

1. THE USING AGENCY MAY REQUIRE A SURFACE FOR A PRONE FIRING POSITION NEAR THE FOXHOLE. THE DESIGNER SHALL COORDINATE THE MATERIAL AND LOCATION WITH THE USING AGENCY.
2. THE NEED FOR FILTER FABRIC SHOULD BE EVALUATED AS PART OF THE SITE ADAPTION PROCESS. A FILTER LAYER MAY OR MAY NOT BE REQUIRED DEPENDING UPON THE SOIL TYPE AT A PARTICULAR SITE.

US Army Corps of Engineers

Symbol	Description	Date	Approved	Symbol	Description	Date	Approved

Designed by: N/A
Date: 01 APR 98
Rev.
Dwn by: DFH
Ckd by: GGG
Reviewed by: GGG
Submitted by: REB
Drawing code: STD 179-00-01
File name: STDCZ.DGN
Plot date: 20 MAR 98
Plot scale: FULL
Design file no.

U. S. ARMY ENGINEERING AND SUPPORT CENTER, HUNTSVILLE
HUNTSVILLE, ALABAMA

FORCE XXI/FORCE MODERNIZATION PROGRAM
STANDARD DESIGN

ONE-MAN AND WALK-IN FOXHOLES

Sheet reference number:
C -12
Sheet of