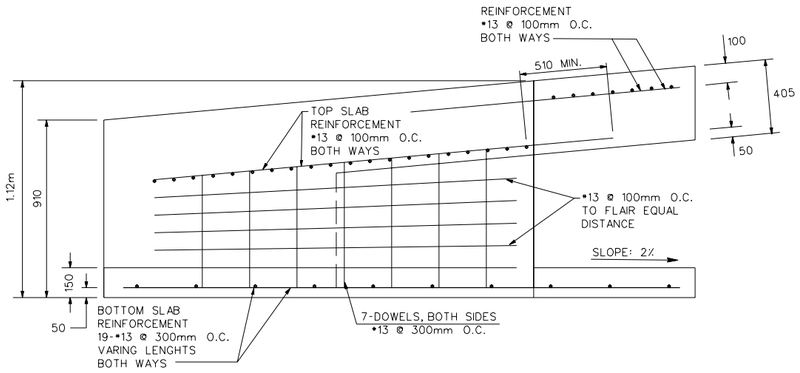

SIDE ELEVATION
N.T.S.

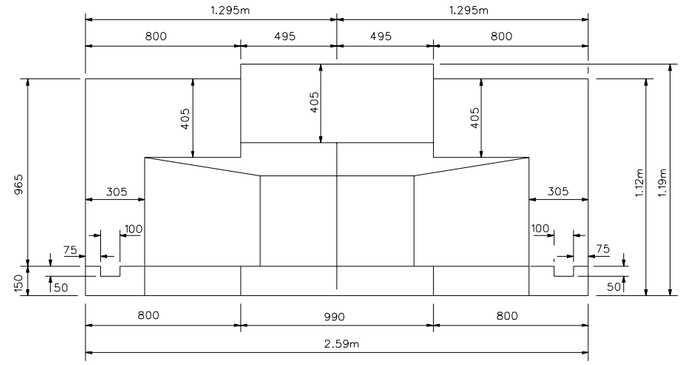

REAR ELEVATION
N.T.S.

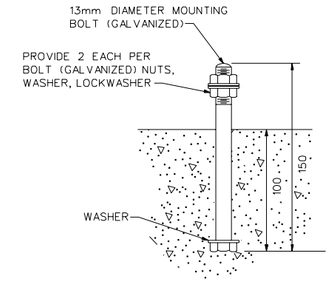

STATS ANCHORING DETAIL
N.T.S.

NOTES:

1. CONCRETE SHALL DEVELOP A MINIMUM COMPRESSIVE STRENGTH OF 28 MPa IN 28 DAYS.
2. EMPLACEMENTS SHALL BE CONSTRUCTED OF REINFORCED CONCRETE; CONCRETE STRUCTURES SHALL BE PRECAST OR CAST-IN-PLACE.
3. ALL REINFORCING STEEL SHALL BE PER ASTM A615, GRADE 60.
4. RETAINING WALLS SHALL BE CONSTRUCTED OF TREATED TIMBERS OR RAILROAD TIES & SECURED WITH •16 DEFORMED STEEL REINFORCING BARS DRIVEN VERTICALLY THROUGH FIELD-DRILLED HOLES. THE BARS SHALL HAVE A MINIMUM LENGTH OF 460mm & SHALL BE LOCATED ON A 610mm SPACING. FILTER FABRIC SHALL BE INSTALLED BEHIND ALL WOOD RETAINING WALLS. FABRIC SHALL EXTEND THE FULL HEIGHT OF THE WALL.
5. AREAS DISTURBED BY CONSTRUCTION ACTIVITIES SHALL BE REVEGETATED OR RESURFACED CONSISTENT WITH THE NATURAL SURROUNDINGS. GROUND COVER SHALL NOT REDUCE TARGET VISIBILITY.
6. ALL DIMENSIONS ARE mm UNLESS OTHERWISE INDICATED.

DOWEL DETAIL
N.T.S.

LIFTING EYE DETAIL
N.T.S.

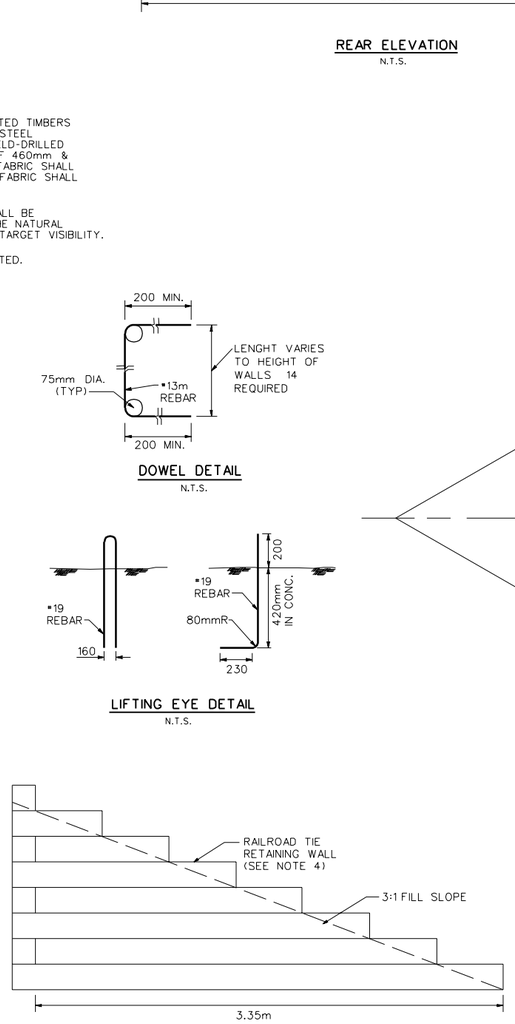

TIMBER RETAINING WALL SIDE ELEV.
N.T.S.

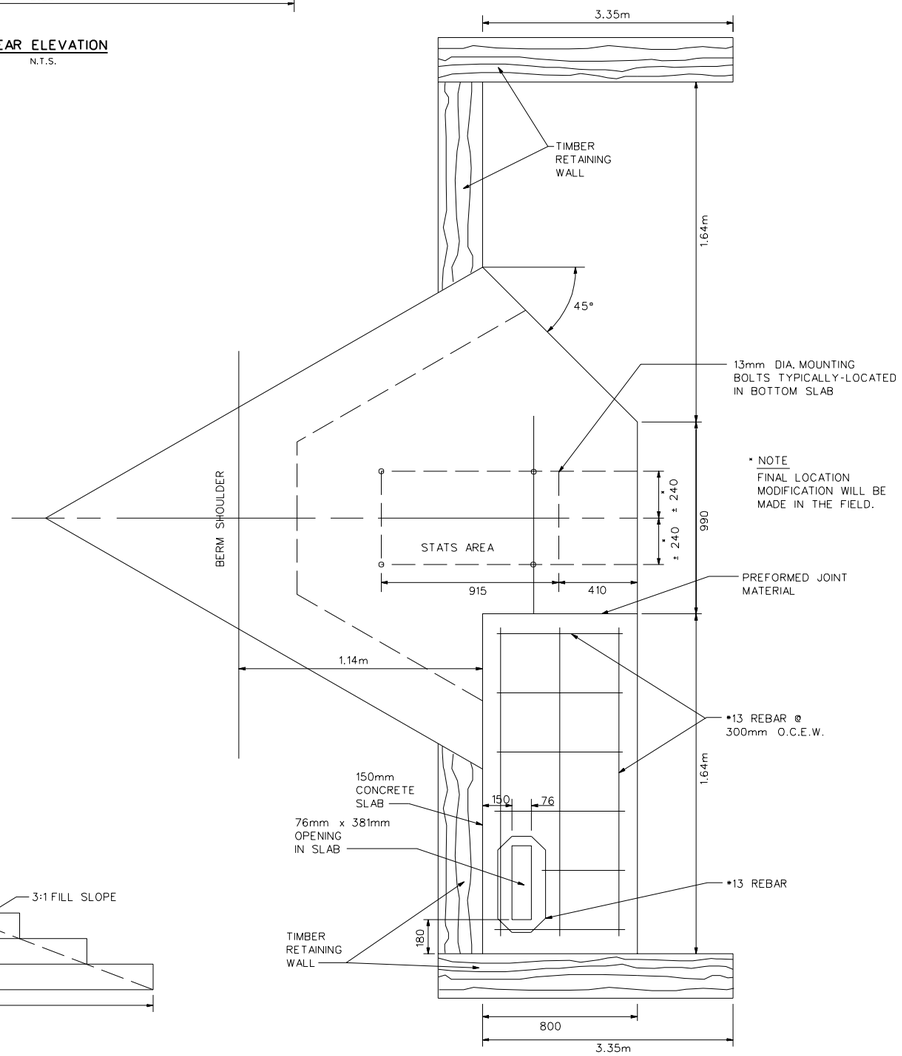

PLAN
N.T.S.

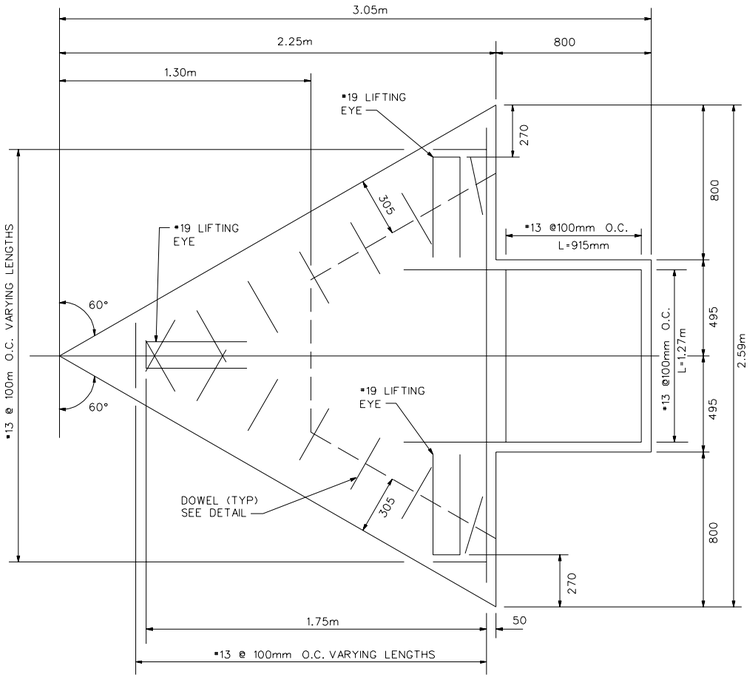

AUXILARY VIEW
N.T.S.

US Army Corps of Engineers

Symbol	Description	Date	Approved	Symbol	Description	Date	Approved

Designed by: N/A
Dwn by: DFH
Ckd by: GGG
Reviewed by: GGG
Submitted by: REB
Date: 01 APR 98
Rev.
Design file no.
Drawing code: STD 179-00-01
File name: STDC10.DGN
Plot date: 20 MAR 98
Plot scale: FULL

U.S. ARMY ENGINEERING AND SUPPORT CENTER, HUNTSVILLE
HUNTSVILLE, ALABAMA

FORCE XXI/FORCE MODERNIZATION PROGRAM
STANDARD DESIGN
CONCRETE STATIONARY
ARMOR TARGET EMPLACEMENT
(2 OF 2)

Sheet reference number:
C-10